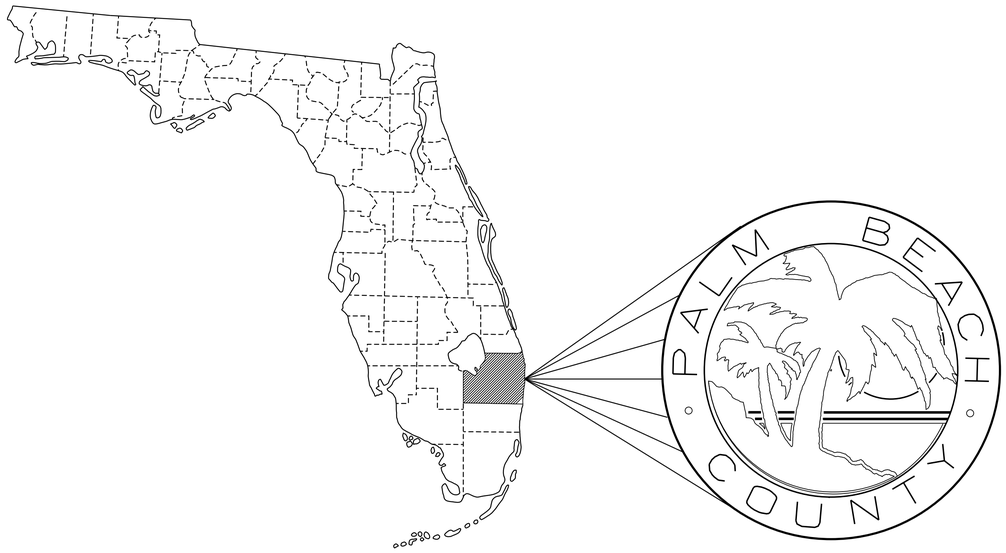

PALM BEACH COUNTY TRAFFIC SIGNAL INSTALLATION STANDARDS AND DETAILS 2024

INDEX OF SHEETS

TYPICAL NO.	
T-1	COVER - TABLE OF CONTENTS
T-2	P.B.C. NOTES
T-3	REVISION NOTES
T-4	P.B.C. STANDARD SYMBOLS
T-5	TYPICAL SPAN WIRE TRAFFIC SIGNAL OPERATION & INSTALLATION
T-5.1	TYPICAL FYA AT SPAN WIRE TRAFFIC SIGNAL OPERATION & INSTALLATION
T-5.2	CABLES DISTRIBUTION SYSTEM FOR SPAN WIRE INSTALLATION
T-5.3	DETAIL - CONCRETE SERVICE POLE & LUMINAIRE WIRING FOR SPAN WIRE
T-5.4	DETAIL - CONCRETE POLE, TYPICAL GUYING CLEAR ZONE & STANDARD LUMINAIRE
T-5.5	SPAN WIRE DISCONNECT WIRING DIAGRAM PER SIGNAL HEAD
T-5.6	MODIFICATION TO SPAN WIRE INSTALLATION DETAIL OF FDOT STANDARD PLANS INDEX 634-001
T-5.7	DETAIL - DISCONNECT WITH DOUBLE DRIP LOOP SIGNAL HEAD
T-6	TYPICAL MAST ARM TRAFFIC SIGNAL OPERATION & INSTALLATION
T-6.1	CABLE DISTRIBUTION SYSTEM FOR MAST ARM TRAFFIC SIGNAL INSTALLATION
T-6.2	DETAIL - SERVICE DISCONNECT/BREAKER ASSEMBLY, MAST ARM HAND HOLE & MAST ARM INSTALLATION
T-6.3	DETAIL - POWER SOURCE METER & BREAKER BOX STUB POLE
T-7	PEDESTRIAN SIGNAL, SIGN & EQUIPMENT INSTALLATION
T-8	DETAIL - SCHOOL ZONE FLASHER DETAIL
T-8.1	DETAIL - PED FLASHER, RRFB & PREPARE TO STOP FLASHER
T-8.2	DETAIL - EQUESTRIAN FLASHER & SPEED FEEDBACK SIGN
T-9	DETAIL - CABINET INSTALLATION, FOUNDATION & TYPICAL GROUND ROD ARRAY
T-9.1	DETAIL - ATX40 CABINET INSTALLATION, FOUNDATION & GROUND ROD ARRAY
T-9.2	DETAIL - ATX32 CABINET, FOUNDATION DETAIL & GROUND ROD ARRAY
T-10	DETAIL - ILLUMINATED STREET NAME SIGN
T-11	DETAIL - STOP BAR LOOPS & ADVANCE LOOPS
T-11.1	DETAIL - INDUCTANCE LOOP DETECTOR SPLICING, LOOP LEAD-IN & VIDEO DETECTION ZONE
T-12	DETAIL - PERMANENT COUNT STATION LOOP
T-13	BLANK
T-14	DETAIL - COMMUNICATION CONDUITS, PULL BOXES & WIRING

ALL NOTES

- ALL NEW PERMISSIVE AND PROTECTED/PERMISSIVE SIGNALS WILL BE FYA.
- FLASHING YELLOW ARROW SIGNAL HEADS AND SIGNING TO BE USED ON BOTH SPAN WIRE AND MAST ARM SIGNALS.
- ALL STOP BAR LOOPS WILL BE 46' LOOPS, SHORTER LOOPS WHERE APPLICABLE WITH COUNTY TRAFFIC ENGINEER APPROVAL.
- MIN. TIER 22 FOR PULL BOX + PULL BOX LID.
- STUB POLE FOR POWER SOURCE METER INSTALLATION SHALL BE 16FT IN TOTAL HEIGHT, 6FT BURRIED UNDERGROUND. (DETAILS ON PAGES 15 & 16 OF 29).
- FOR PAVEMENT MARKINGS & SIGNING DETAILS REFER TO P.B.C. TYPICAL DETAILS FOR PAVEMENT MARKING, SIGNING & GEOMETRICS LATEST EDITION.
- ALL MAST ARMS MUST BE MANUFACTURED WITH TERMINAL COMPONENTS TO ENCLOSE TERMINAL BLOCK.
- ALL ILLUMINATED STREET NAME SIGNS MUST USE BRITELITE TCSSIGNBL SERIES (APL 700-015-024) DOUBLE FACED 6'X2' OR 8'X2'
  PHOTO CELL: TORK 5237 UL 105-285V 50-60HZ
  RECEPTACLE: TORK 2421 120-480V
  SIGN BRACKET: PELCO SP 1072-FL

PALM BEACH COUNTY, FLORIDA
TRAFFIC DIVISION
SIGNAL TYPICAL

P.B.C. NOTES

SIGNATURE		DATE	FATMEH N. JAFAR ENGINEER OF RECORD	
	NAME	DATE	SCALE	CONTRACT NO.
DRAWN BY			N. T. S.	
CHECKED BY				
DRAWING T-2			SHEET 2 OF 29	

- REVISED SHEET LABELS & TABLE OF CONTENTS ACCORDINGLY.
- SHEET T-5.3 (8 OF 29) UPDATED CONCRETE STUB POLE HEIGHT.

PALM BEACH COUNTY, FLORIDA
TRAFFIC DIVISION

SIGNAL TYPICAL

REVISION NOTES

SIGNATURE			DATE	FATMEH N. JAFAR ENGINEER OF RECORD
	NAME	DATE	SCALE	CONTRACT NO.
DRAWN BY			N. T. S.	
CHECKED BY				
DRAWING T-3			SHEET 3 OF 29	

SYMBOL LEGEND

- PEDESTRIAN DETECTOR
- PEDESTRIAN SIGNAL HEAD
- PEDESTRIAN DETECTOR & PEDESTRIAN SIGNAL HEAD
- LUMINAIRE (LED)
- LUMINAIRE (HPS)
- METAL POLE/POST
- CONCRETE POLE (OTHERS)
- CONCRETE POLE FOR SIGNAL SUPPORT (PBC)
- WOOD POLE
- GROUND MOUNTED SIGN
- FLASHER
- OVERHEAD SIGN
- FLASHER ON GROUND MOUNTED SIGN
- METAL POLE/POST WITH PEDESTRIAN DETECTOR & PEDESTRIAN SIGNAL HEAD
- CONCRETE POLE (PBC) WITH PEDESTRIAN DETECTOR & PEDESTRIAN SIGNAL HEAD
- LUMINAIRE (LED) ON CONCRETE POLE
- CONTROLLER CABINET
- HEAD ID
- SIGN ID
- POLE ID
- 3-SECTION/4-SECTION SIGNAL HEAD & 3-SECTION/4-SECTION FYA SIGNAL HEAD
- 5-SECTION SIGNAL HEAD
- AUDIBLE PEDESTRIAN DETECTOR
- M.A. MAST ARM DETAIL CALL OUT
- M.A. MAST ARM WITH PEDESTRIAN DETECTOR & PEDESTRIAN SIGNAL HEAD
- V VIDEO DETECTION
- CONCRETE STUB POLE
- PULL BOX (CALLOUT SIZE)
- OVERHEAD TRUSS STRUCTURE
- OVERHEAD TRUSS STRUCTURE WITH FLASHERS AND SIGN
- MAST ARM
- MAST ARM WITH THREE SIGNAL HEADS
- LOOP DETECTION
- OD #1 VIDEO DETECTION ZONE (OVERHEAD DETECTION)
- MD #1 MICRO DETECTION ZONE (OVERHEAD DETECTION)
- V GRID SMART DETECTION (OPTICAL DETECTION)
- MICRO DETECTOR
- ITS CAMERA

GENERAL NOTES:

1. THIS DRAWING IS NOT TO SCALE.
2. DESIGN, LAYOUT & DATA ON THIS SHEET ARE FOR ILLUSTRATION PURPOSE ONLY.

PALM BEACH COUNTY, FLORIDA
TRAFFIC DIVISION

SIGNAL TYPICAL

P.B.C. STANDARD SYMBOLS

SIGNATURE		DATE	FATMEH N. JAFAR ENGINEER OF RECORD	
	NAME	DATE	SCALE	CONTRACT NO.
DRAWN BY			N. T. S.	
CHECKED BY				

DRAWING T-4 | SHEET 4 OF 29

ASSOCIATED PHASE MOVEMENTS

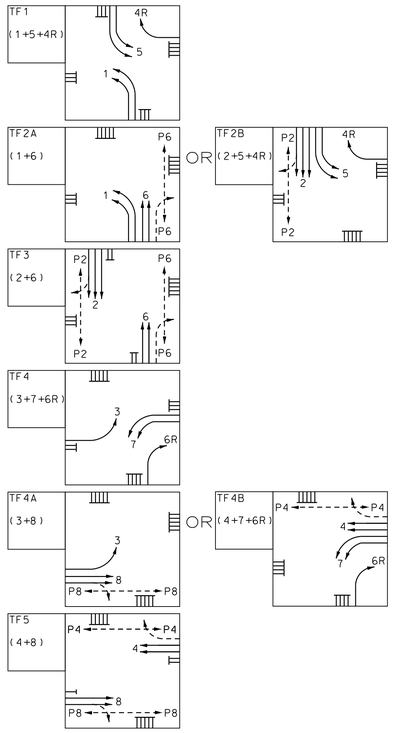

DETAIL OF SIGNAL HEADS

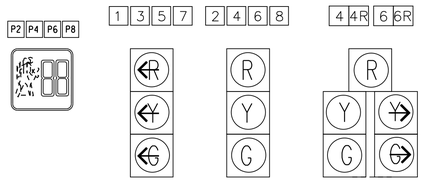

DESIGN NOTES:

1. LUMINAIRE LOCATIONS:
   NE, NW, SE, SW (PBC)
2. FLASHING OPERATION:
   YELLOW --- 2 AND 6
   RED ------- 1, 3, 4, 5, 7, AND 8
3. SPEED LIMITS:
   MAJOR BOULEVARD - 45 MPH
   MINOR ROAD - 45 MPH

DETAIL OF SIGNS

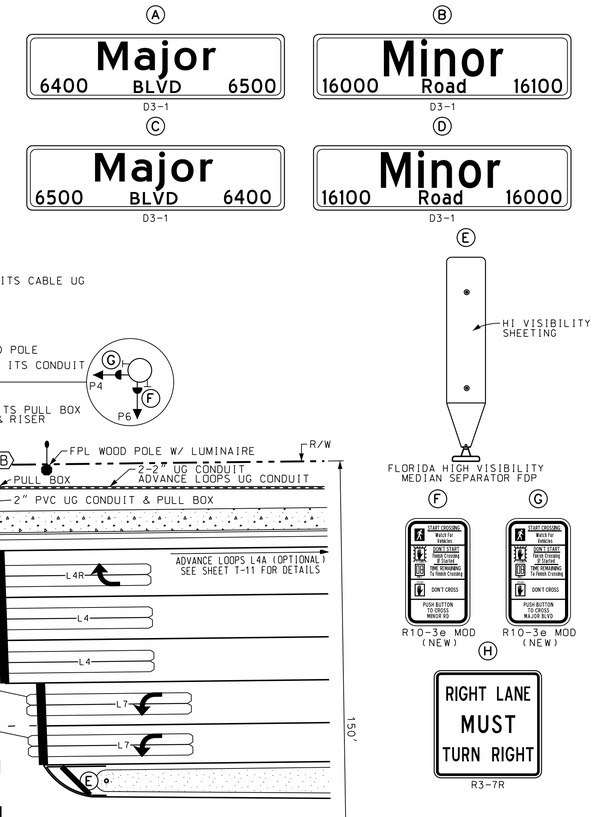

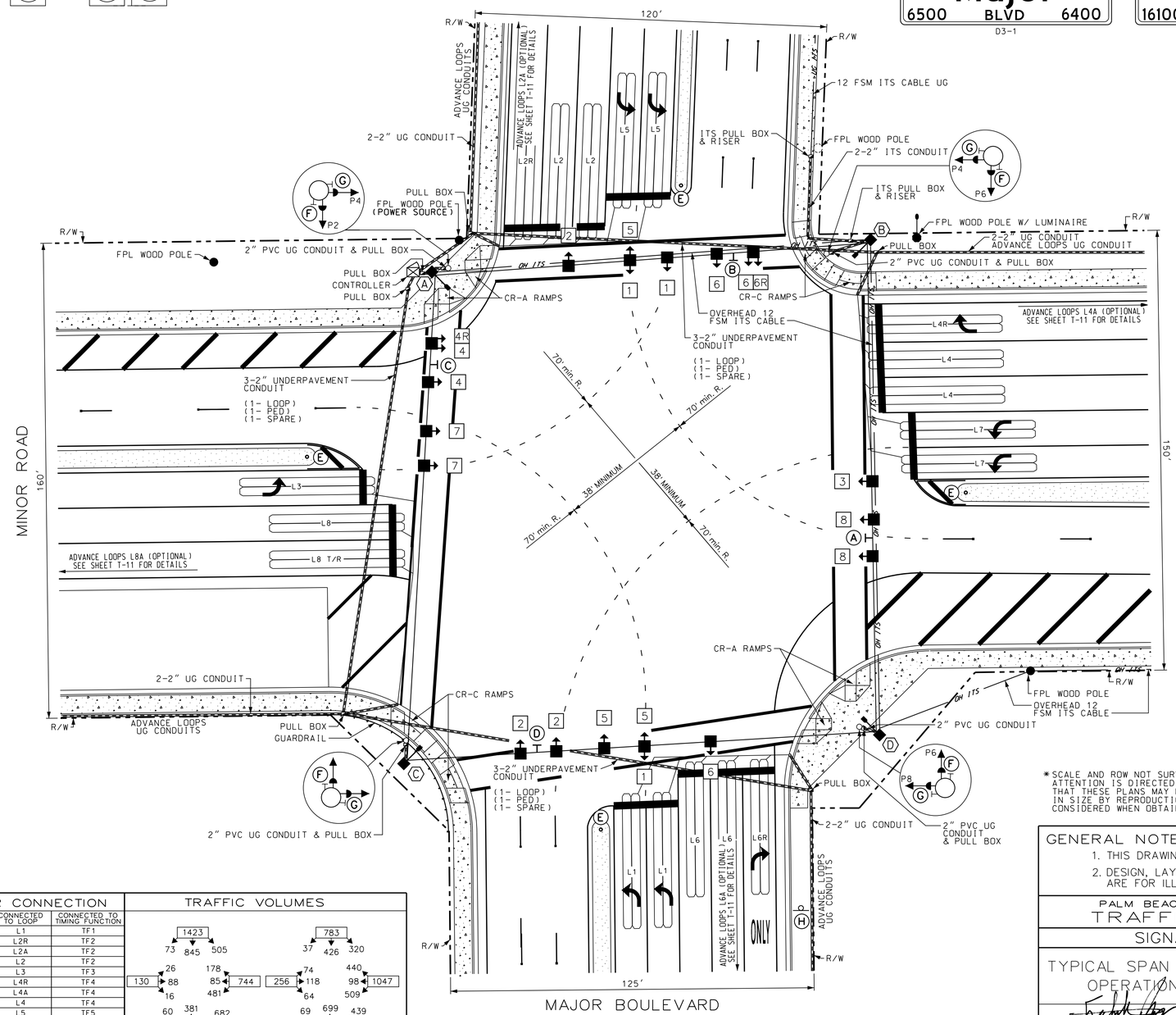

*SCALE AND ROW NOT SURVEY ACCURATE. ATTENTION IS DIRECTED TO THE FACT THAT THESE PLANS MAY HAVE BEEN ALTERED IN SIZE BY REPRODUCTION. THIS MUST BE CONSIDERED WHEN OBTAINING SCALED DATA.

*(A,B,D & E) REFER TO SHEET T-5.3 (CONCRETE POLE DETAIL)

POLE TABULATION

POLE I.D.	UPPER TIE-INTO TOP OF POLE *(A)	LOWER TIE-INTO TOP OF POLE *(B)	SPAN	POLE LENGTH *(D)	UPPER TIE-INTO GROUND LEVEL (D-E-A)	LOWER TIE-INTO GROUND LEVEL (D-E-B)	LOWER TIE-INTO CROWN LEVEL	TYPE	CLASS	ROAD-CROWN TO GROUND LEVEL	DEPTH BELOW GROUND *(E)
A	4'	14'	161'	46'	33'	23'	23'	CONC	VII	0'	9'
B	4'	14'	166'	46'	33'	23'	23'	CONC	VII	0'	9'
C	4'	14'	161'	46'	33'	23'	23'	CONC	VII	0'	9'
D	4'	14'	166'	46'	33'	23'	23'	CONC	VII	0'	9'

LOOP DETECTOR CONNECTION

DETECTOR UNIT NO.	DETECTOR OPERATION	CONNECTED TO LOOP	CONNECTED TO TIMING FUNCTION
1	NORMAL	L1	TF1
2	NORMAL	L2R	TF2
3	NORMAL	L2A	TF2
4	NORMAL	L2	TF2
5	NORMAL	L3	TF3
6	DELAY/NORMAL	L4R	TF4
7	NORMAL	L4A	TF4
8	NORMAL	L4	TF4
9	NORMAL	L5	TF5
10	NORMAL	L6R	TF6
11	NORMAL	L6A	TF6
12	NORMAL	L6	TF6
13	NORMAL	L7	TF7
14	DELAY/NORMAL	L8 T/R	TF8
15	NORMAL	L8A	TF8
16	NORMAL	L8	TF8

TRAFFIC VOLUMES

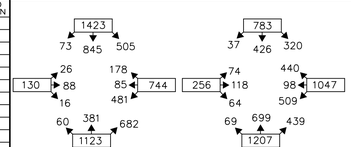

A.M. PEAK HOUR
TOTAL=3420
DATE: 03/25/2023
TIME: 7:45-8:45

P.M. PEAK HOUR
TOTAL=3293
DATE: 03/25/2023
TIME: 3:00-4:00

GENERAL NOTES:

1. THIS DRAWING IS NOT TO SCALE.
2. DESIGN, LAYOUT & DATA ON THIS SHEET ARE FOR ILLUSTRATION PURPOSE ONLY.

PALM BEACH COUNTY, FLORIDA
TRAFFIC DIVISION

SIGNAL TYPICAL

TYPICAL SPAN WIRE TRAFFIC SIGNAL OPERATION & INSTALLATION

SIGNATURE — DATE — FATMEH N. JAFAR, ENGINEER OF RECORD

	NAME	DATE	SCALE	CONTRACT NO.
DRAWN BY			* N. T. S.	
CHECKED BY				

DRAWING T-5 — SHEET 5 OF 29

ASSOCIATED PHASE MOVEMENTS

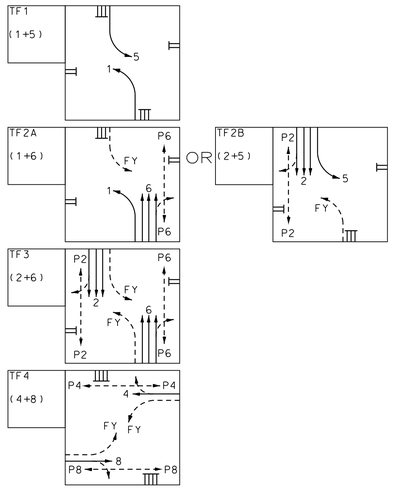

DETAIL OF SIGNAL HEADS

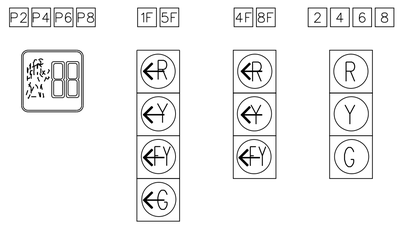

DETAIL OF SIGNS

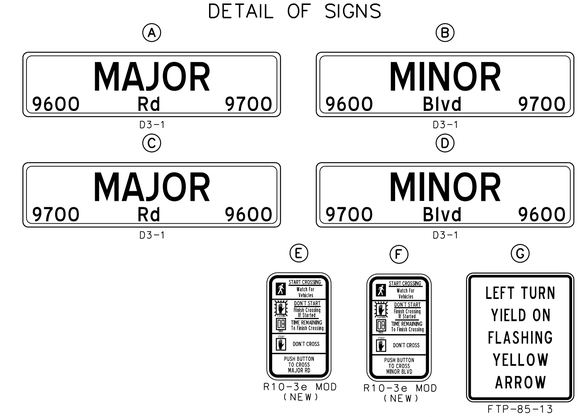

DESIGN NOTES:

1. LUMINAIRE LOCATIONS:
   NE, NW, SE, SW (PBC) (LED)
2. FLASHING OPERATION:
   YELLOW --- 2 AND 6
   RED ------- 1F, 4, 4F, 5F, 8 AND 8F
3. SPEED LIMITS:
   MINOR BLVD - 30 MPH
   MAJOR RD - 45 MPH

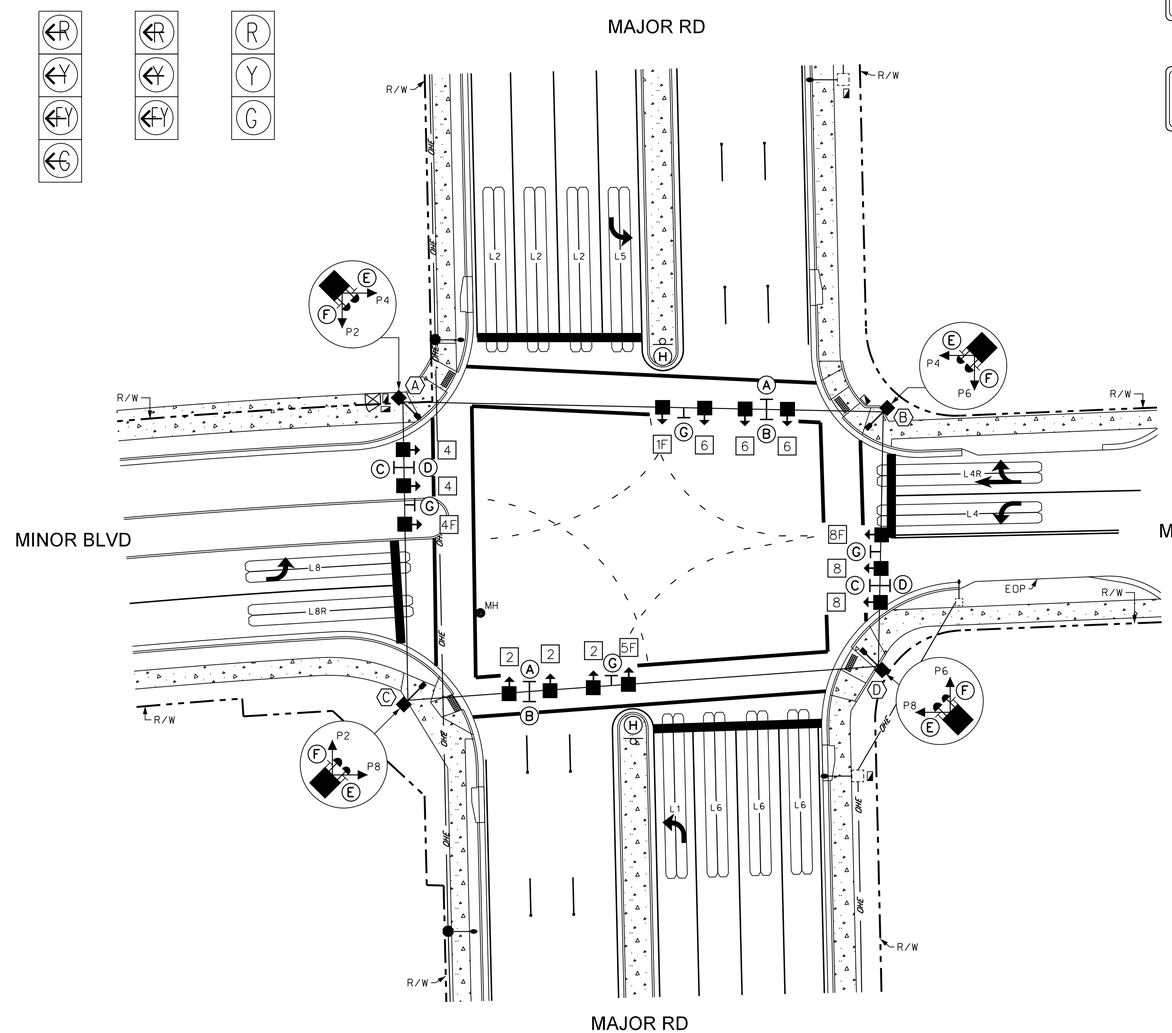

GRAPHIC SCALE

0 5 20 40 80

*SCALE AND ROW NOT SURVEY ACCURATE. ATTENTION IS DIRECTED TO THE FACT THAT THESE PLANS MAY HAVE BEEN ALTERED IN SIZE BY REPRODUCTION. THIS MUST BE CONSIDERED WHEN OBTAINING SCALED DATA.

GENERAL NOTES:

1. THIS DRAWING IS NOT TO SCALE.
2. DESIGN, LAYOUT & DATA ON THIS SHEET ARE FOR ILLUSTRATION PURPOSE ONLY.

PALM BEACH COUNTY, FLORIDA
TRAFFIC DIVISION

SIGNAL TYPICAL

TYPICAL FYA AT SPAN WIRE TRAFFIC SIGNAL OPERATION & INSTALLATION

SIGNATURE | DATE | FATMEH N. JAFAR, ENGINEER OF RECORD

	NAME	DATE	SCALE	CONTRACT NO.
DRAWN BY			* N. T. S.	
CHECKED BY				

DRAWING T-5.1 | SHEET 6 OF 29

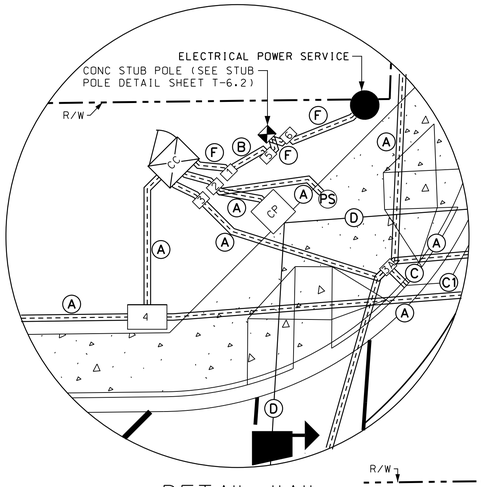

DETAIL "A"

NOTES FOR SPAN WIRE INSTALLATION

1. ANY CONDUIT ABOVE GROUND SHALL BE ALUMINUM OR HD GALVANIZED.
2. ANY CONDUIT BELOW GROUND SHALL BE SCHEDULE 40 ELECTRICAL PVC.
3. ANY VIDEO AND LOOPS USED AT AN INTERSECTION SHALL BE INSTALLED IN ITS OWN SEPERATE CONDUIT AND PULL BOX.
4. ALL PULL BOXES FOR POWER SERVICE SHALL BE 17x30x12 OR AS APPROVED BY PBC ENGINEER.
5. ALL PULL BOXES FOR SIGNAL, PEDS, OR LOOPS SHALL BE 17x30x12.
6. ALL SPARE CONDUITS MUST HAVE PULL LINES INSTALLED.
7. ANY UNUSED CONDUIT SHALL BE CAPPED WITH AN END CAP.

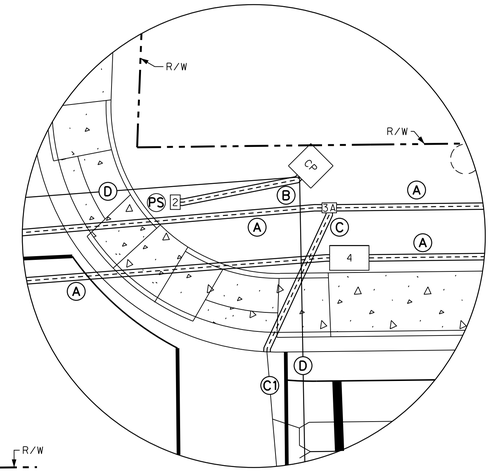

DETAIL "B"

LEGEND

CC = CONTROLLER CABINET
CP = CONCRETE POLE
PS = PEDESTRIAN SIGNAL
1 = PULL BOX FOR POWER SERVICE SHALL BE (17X30X12)
2 = PULL BOX FOR SIGNAL & PEDESTRIAN CABLE (17X30X12)
3 = PULL BOX FOR ALL LOOPS (17X30X12)
3A = PULL BOX FOR CONNECTING STOP BAR LOOPS & FOR OPTIONAL ADVANCE LOOPS (17X30X12)
4 = PULL BOX FOR ITS (30X48X24). OPTIONAL SIZE (17X30X24) OR AS DETERMINED BY ENGINEER.
5 = PULL BOX FOR POWER SERVICE 13X24X12 OPTIONAL AS APPROVED BY PBC ENGINEER.
6 = PULL BOX FOR FPL POWER CONNECTION (17X30X12)
A = 2-2" UNDERGROUND/UNDER PAVEMENT CONDUIT
B = 1-2" UNDERGROUND/UNDER PAVEMENT CONDUIT (PVC)
C = 2-2" UNDERGROUND CONDUIT FOR LOOP LEAD-IN (PIPE 1' (FT) UNDER CURB)
C1 = LOOP LEAD-IN
D = SPAN WIRE WHEN SPECIFIED WIRING (VIDEO OR MICROWAVE WITH SIGNAL CABLE)

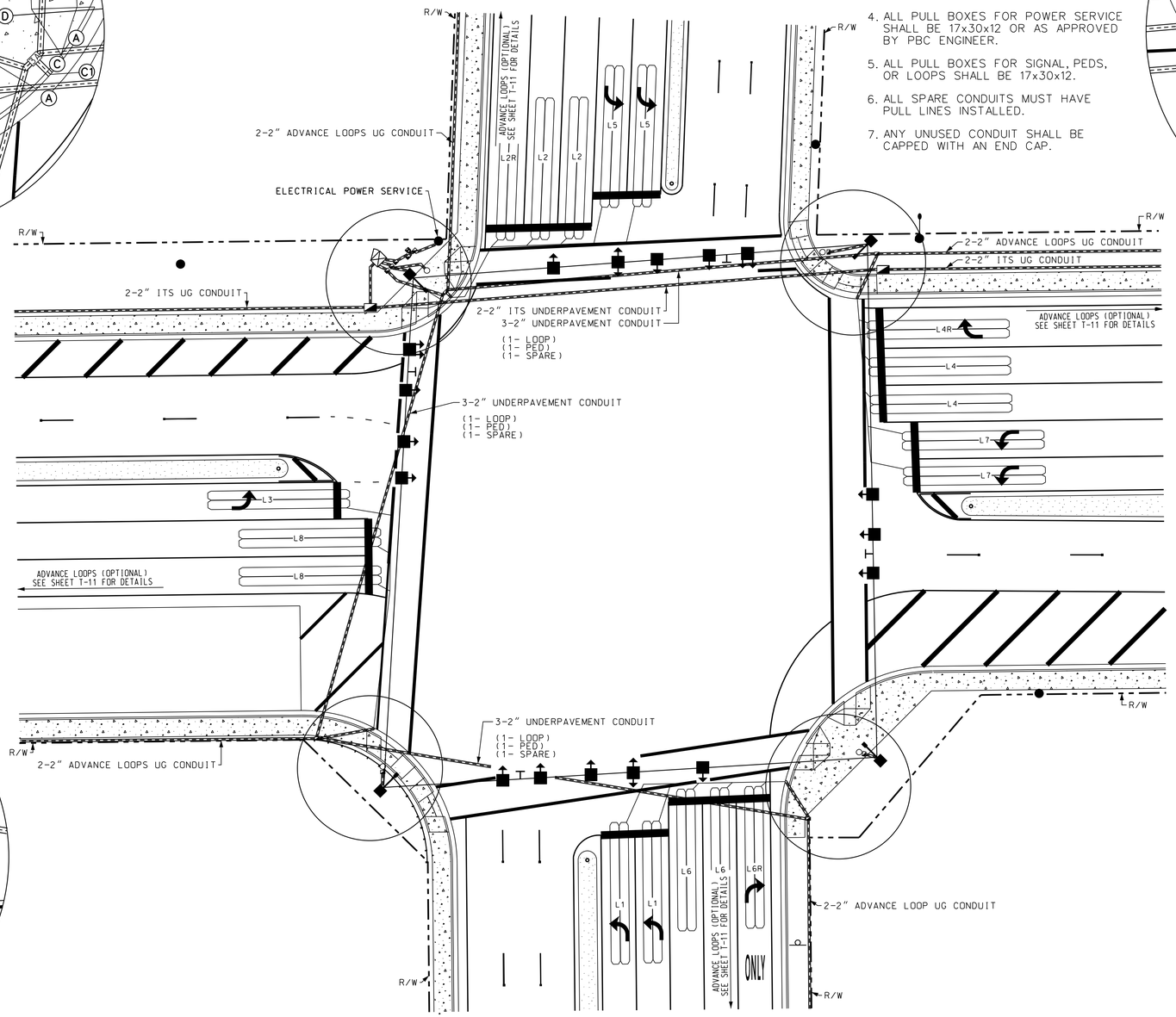

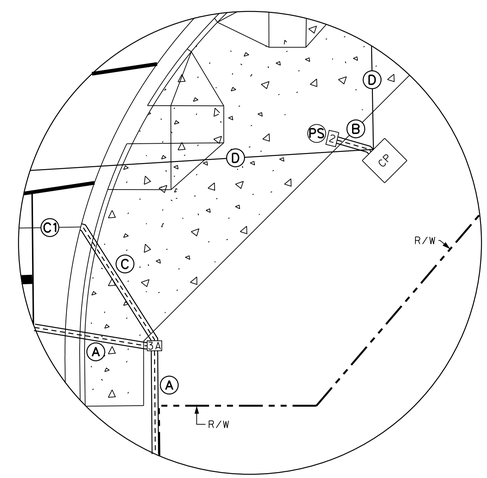

DETAIL "D"

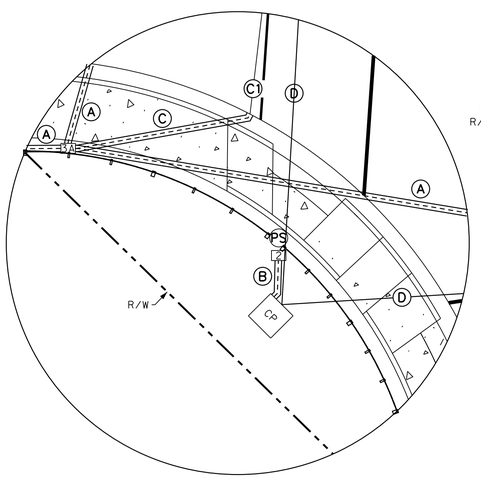

DETAIL "C"

GENERAL NOTES:
1. THIS DRAWING IS NOT TO SCALE.
2. DESIGN, LAYOUT & DATA ON THIS SHEET ARE FOR ILLUSTRATION PURPOSE ONLY.

PALM BEACH COUNTY, FLORIDA
TRAFFIC DIVISION

SIGNAL TYPICAL

CABLES DISTRIBUTION SYSTEM FOR SPAN WIRE INSTALLATION

SIGNATURE			DATE	FATMEH N. JAFAR ENGINEER OF RECORD
	NAME	DATE	SCALE	CONTRACT NO.
DRAWN BY			* N. T. S.	
CHECKED BY				
DRAWING T-5.2			SHEET 7 OF 29	

NOTES:

1. BREAKER BOX SQUARE D MODEL #QO24L70RB, OR APPROVED EQUIVALENT.
2. THE LIGHTING ARRESTOR TO BE LOCATED ON THE SIDE OF THE MAIN DISCONNECT ENCLOSURE.
3. THE MAIN DISCONNECT SHALL BE LOCKABLE.
4. THE MAIN DISCONNECT ENCLOSURE SHALL BE NEMA 4X OR BETTER.
5. FOR GROUNDING ROD INFORMATION SEE NOTES ON T-6.3.
6. BOND ALL ELEMENTS TOGETHER TO FORM AN INTERSECTION GROUNDING NETWORK IN ACCORDANCE WITH SECTION 620 OF THE FDOT CURRENT STANDARD SPECIFICATIONS FOR ROAD AND BRIDGE CONSTRUCTION. THE BOND WIRE SHALL BE RUN IN CONDUIT WITH THE ELECTRICAL SERVICE WIRE OR SIGNAL CABLE.
7. STAINLESS STEEL FLEXIBLE CONDUITS ARE APPROVED FOR USE FROM THE ELECTRICAL DISCONNECT TO THE CABINET THEN BOTH ARE ON THE SAME POLE AND INSULATED.
8. NEW INSTALLATIONS REQUIRE COMPLETE HARDWARE AS SHOWN FOR THE OPTION: INSTALLATION AT EXISTING SIGNALS REQUIRE NEW DEVICE WIRE. SECOND BREAKER. CONDUIT RISER. AND OTHER ASSOCIATED HARDWARE FOR COMPLETE AND OPERATIONAL PRODUCT. GROUNDING IS REQUIRED FOR ALL PROJECTS.
9. LUMINAIRE SERVICE TO BE TIE-WRAPPED TO CATENARY (UPPER) CABLE. SPACED MAXIMUM OF 1 FOOT APART.
10. THE LUMINAIRE SERVICE SHALL HAVE A SEPARATE BREAKER INSIDE THE MAIN DISCONNECT.
11. MINIMUM CLEARENCE FROM BOTTOM OF NIPPLE TO GROUND LEVEL IS TO BE 8 FEET.
12. ALL ABOVE GROUND METAL CONDUITS TO BE BONDED WITH BONDING CLAMPS WHEN TRANSITIONED FROM PVC. IF ENTIRE RUN IS METAL BONDING SHALL BE DONE IN PULL BOX WITH GROUNDING BUSHING.

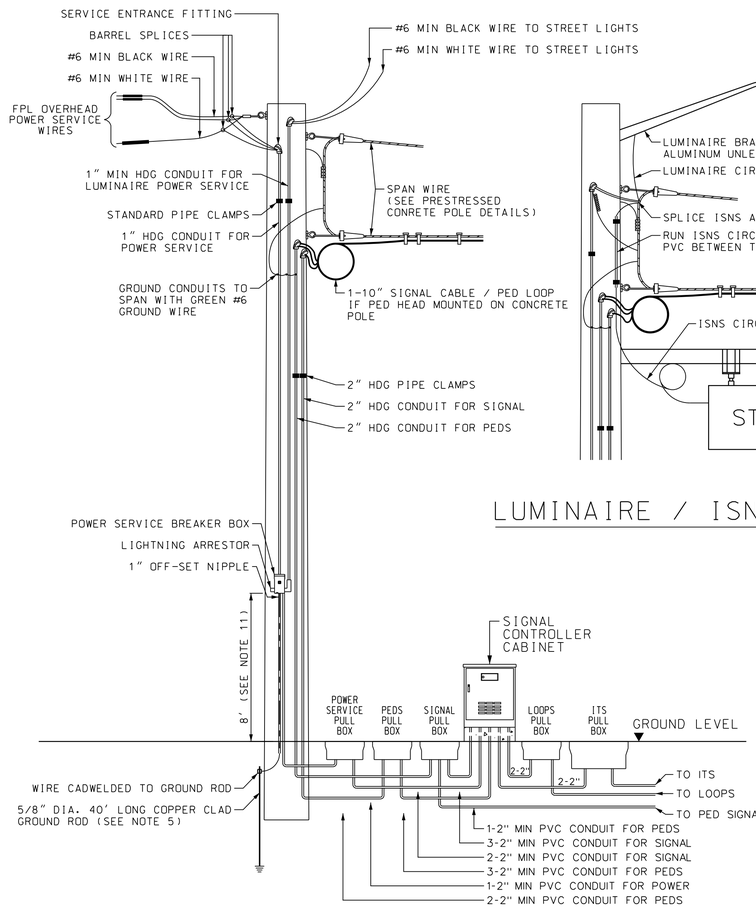

CONCRETE POLE DETAIL (OVERHEAD SERVICE)

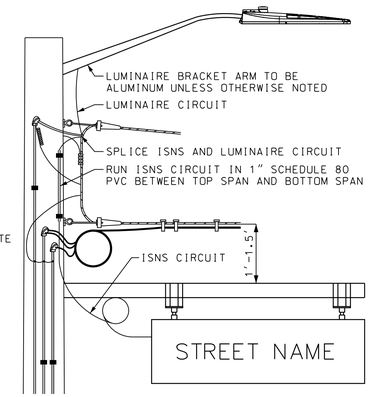

LUMINAIRE / ISNS WIRING DETAIL

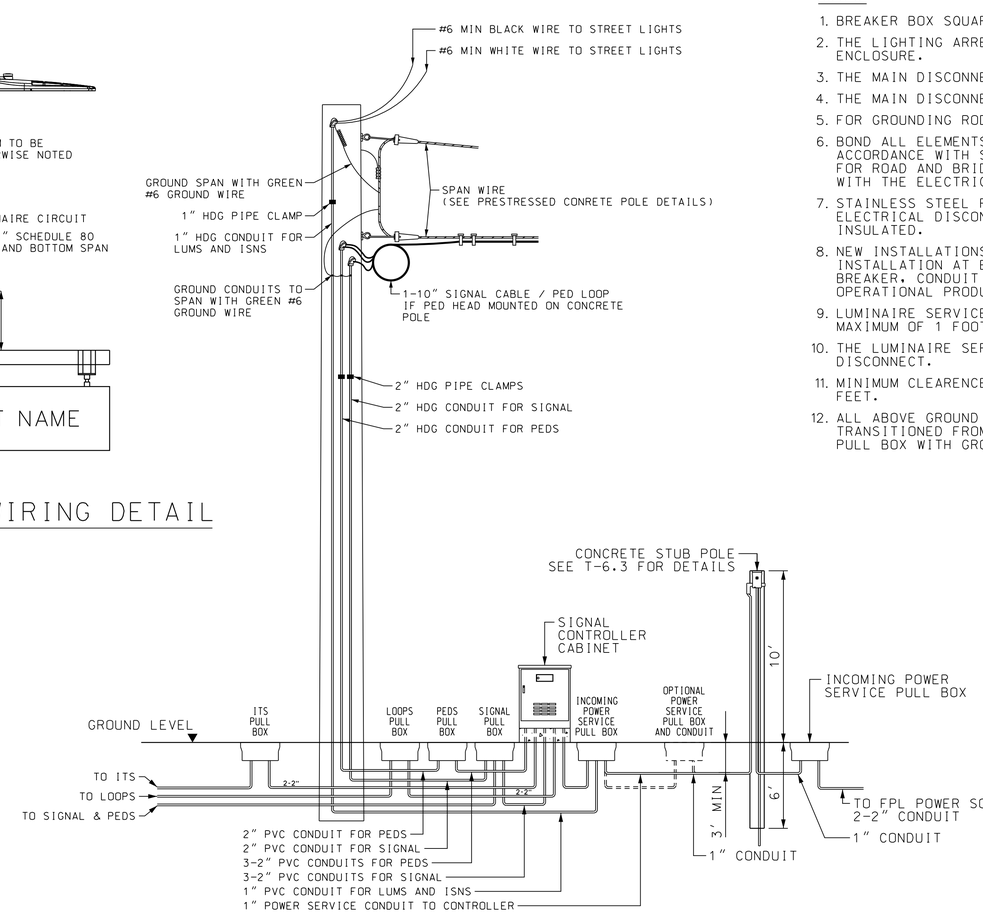

CONCRETE POLE DETAIL (UNDERGROUND SERVICE)

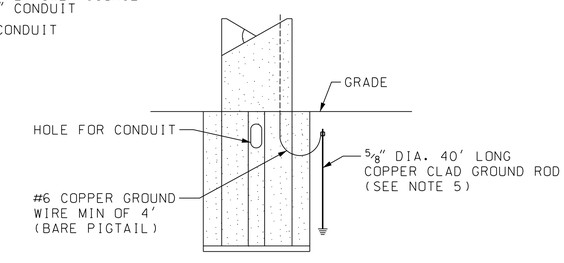

PRESTRESSED CONCRETE POLE DETAIL

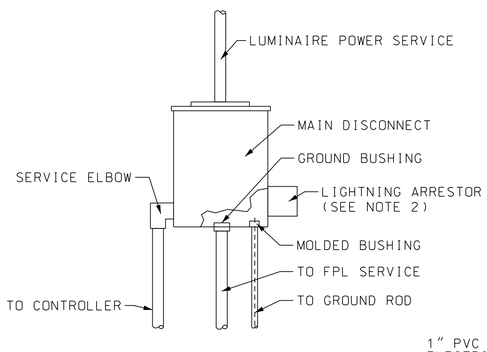

DETAIL "A"

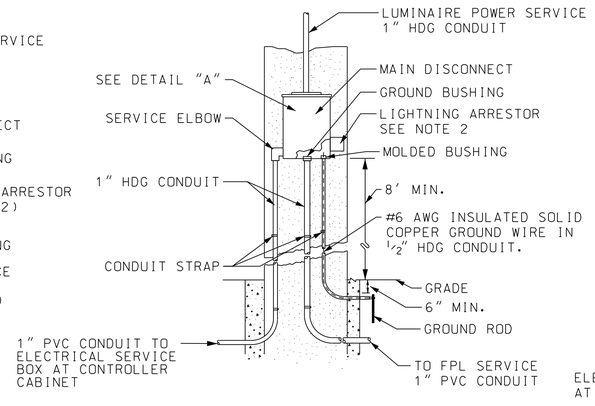

MAIN DISCONNECT/UNDERGROUND FEED DETAIL

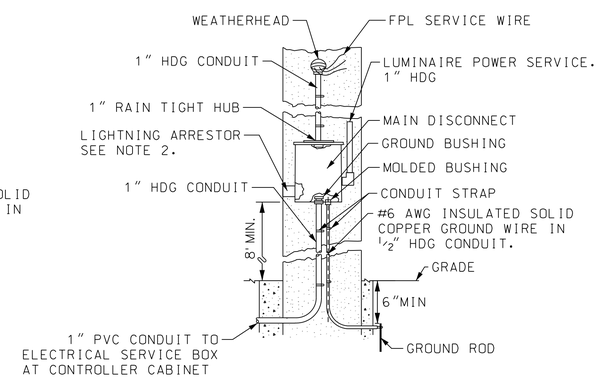

AERIAL FEED DETAIL

GENERAL NOTES:

1. THIS DRAWING IS NOT TO SCALE.
2. DESIGN, LAYOUT & DATA ON THIS SHEET ARE FOR ILLUSTRATION PURPOSE ONLY.

PALM BEACH COUNTY, FLORIDA
TRAFFIC DIVISION

SIGNAL TYPICAL

DETAIL - CONCRETE SERVICE POLE & LUMINAIRE WIRING FOR SPAN WIRE

SIGNATURE		DATE	FATMEH N. JAFAR ENGINEER OF RECORD
	NAME	DATE	SCALE: * N. T. S. / CONTRACT NO.
DRAWN BY			
CHECKED BY			

DRAWING T-5.3 | SHEET 8 OF 29

TYPICAL GUYING & CLEAR ZONE (NO EXCAVATION) DETAIL

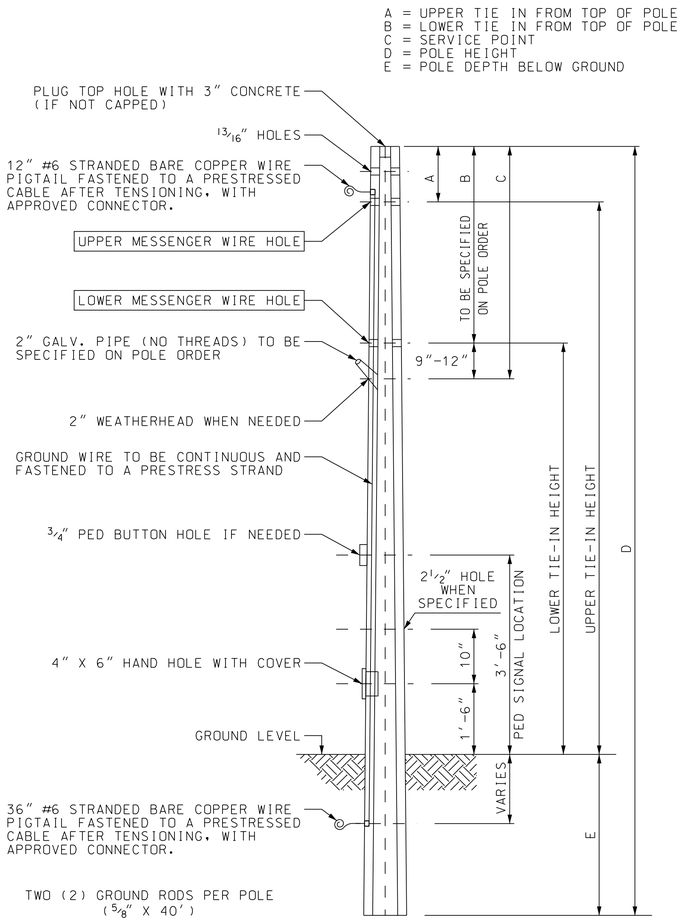

CONCRETE POLE DETAIL

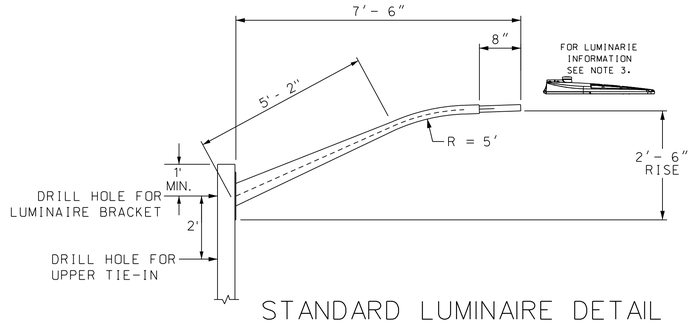

STANDARD LUMINAIRE DETAIL

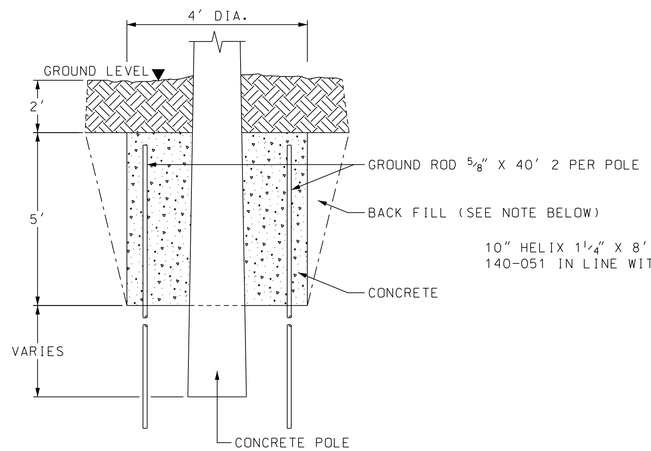

SECTION "A"-"A"

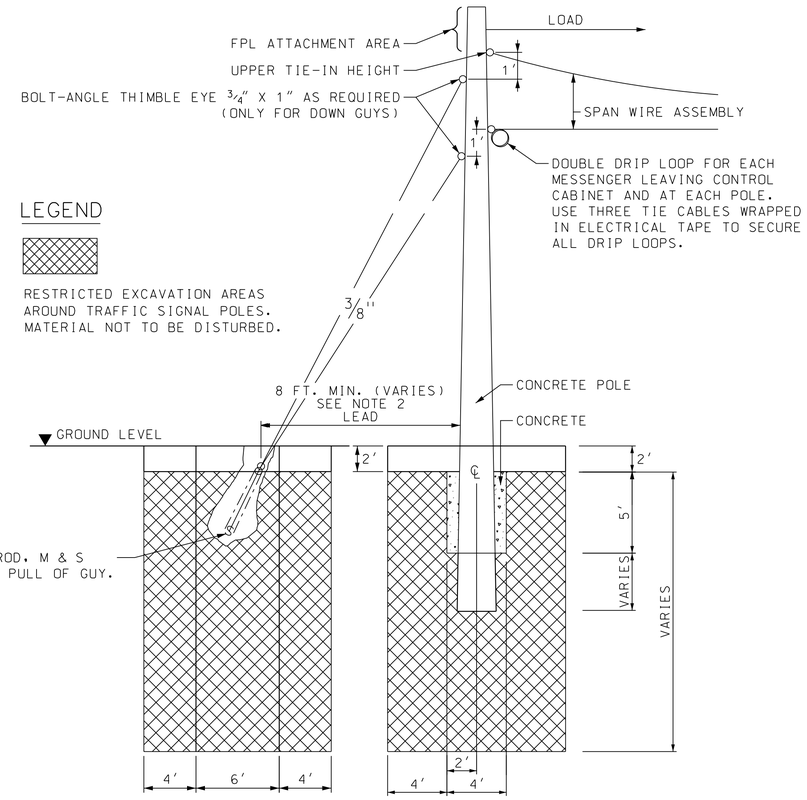

ELEVATION VIEW

LEGEND

RESTRICTED EXCAVATION AREAS AROUND TRAFFIC SIGNAL POLES. MATERIAL NOT TO BE DISTURBED.

AT THE OPTION OF THE CONTRACTOR, A PRECAST LEVELING PAD MAY BE USED AS SHOWN BELOW.

* CLASS VI P POLE - 3.5 CU. YDS. MIN. CONCRETE PER POLE BASE
* CLASS VII P POLE - 4 CU. YDS. MIN. CONCRETE PER POLE BASE
* CLASS VIII P POLE - 5 CU. YDS. MIN. CONCRETE PER POLE BASE

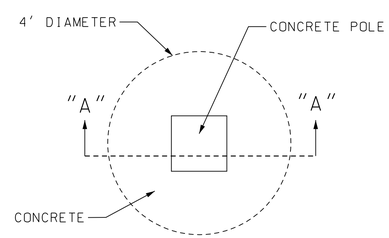

FOUNDATION PLAN

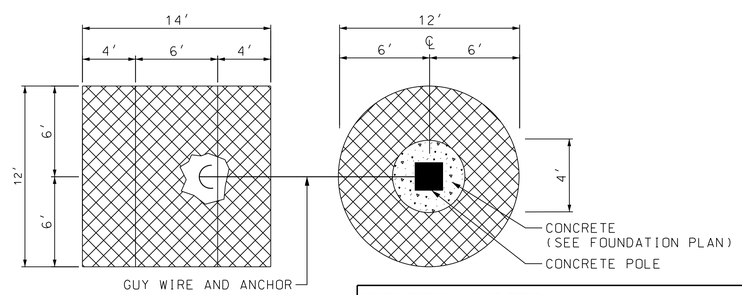

PLAN VIEW

FOUNDATION NOTES:

EXCAVATION & BACKFILL: EXCAVATION AND BACKFILL FOR THE FOOTINGS SHALL BE IN ACCORDANCE WITH ARTICLES 125-4 AND 125-8.2 WITH THE EXCEPTION OF THE BACKFILL IN LIEU OF THE REQUIREMENTS FOR OBTAINING THE SPECIFIED DENSITY, MAY BE HAND TAMPED IN FOUR INCH MAXIMUM LAYERS OR MACHINE TAMPED IN MAXIMUM SIX INCH LAYERS. THE MATERIAL SHOULD BE NEITHER DRY NOR SATURATED. BACKFILLING SHALL BE DONE WITH POURED CONCRETE SUFFICIENT TO FILL CAVITY.

CONCRETE: FOOTING & BACKFILL TO BE POURED WITH 2500 PSI CONCRETE (PER FDOT SSRBC SECTION 346 & 347).

FORMS: SHALL BE IN ACCORDANCE WITH ARTICLE 400-5 IF THE FOOTING IS POURED IN AN OVERSIZE HOLE, THE CONCRETE IN THE TOP SIX INCHES SHALL BE PLACED IN A FORM. ALL EXPOSED SURFACES SHALL BE TROWELLED TO A SMOOTH FINISH, AND 48" TUNNEL LINERS SHALL BE USED.

NOTES:

1. TRAFFIC SIGNAL POLES TO BE LOCATED WITHIN RIGHT OF WAY AND MAINTAIN CLEARANCES AS SPECIFIED BY FDOT LATEST DESIGN STANDARDS.
2. GUY WIRE LEAD DISTANCE TO BE 8 FT. MINIMUM OR AS SPECIFIED BY STRUCTURAL ANALYSIS.
3. LED LUMINAIRES ARE TO BE AUTOBAHN SERIES ATB2 OR EQUAL TO BE APPROVED BY PALM BEACH COUNTY ENGINEER.
4. EACH LUMINAIRE SHALL HAVE ITS OWN SEPERATE PHOTOCELL.
5. FOR GROUNDING ROD INFORMATION SEE NOTES ON T-6.3.
6. FOR LUMINAIRE WIRING SPECS SEE NOTES ON T-5.3.

GENERAL NOTES:

1. THIS DRAWING IS NOT TO SCALE.
2. DESIGN, LAYOUT & DATA ON THIS SHEET ARE FOR ILLUSTRATION PURPOSE ONLY.

PALM BEACH COUNTY, FLORIDA
TRAFFIC DIVISION

SIGNAL TYPICAL

DETAIL - CONCRETE POLE, TYPICAL GUYING CLEAR ZONE & STANDARD LUMINAIRE

SIGNATURE		DATE	FATMEH N. JAFAR ENGINEER OF RECORD	
	NAME	DATE	SCALE	CONTRACT NO.
DRAWN BY			* N. T. S.	
CHECKED BY				

DRAWING T-5.4 | SHEET 9 OF 29

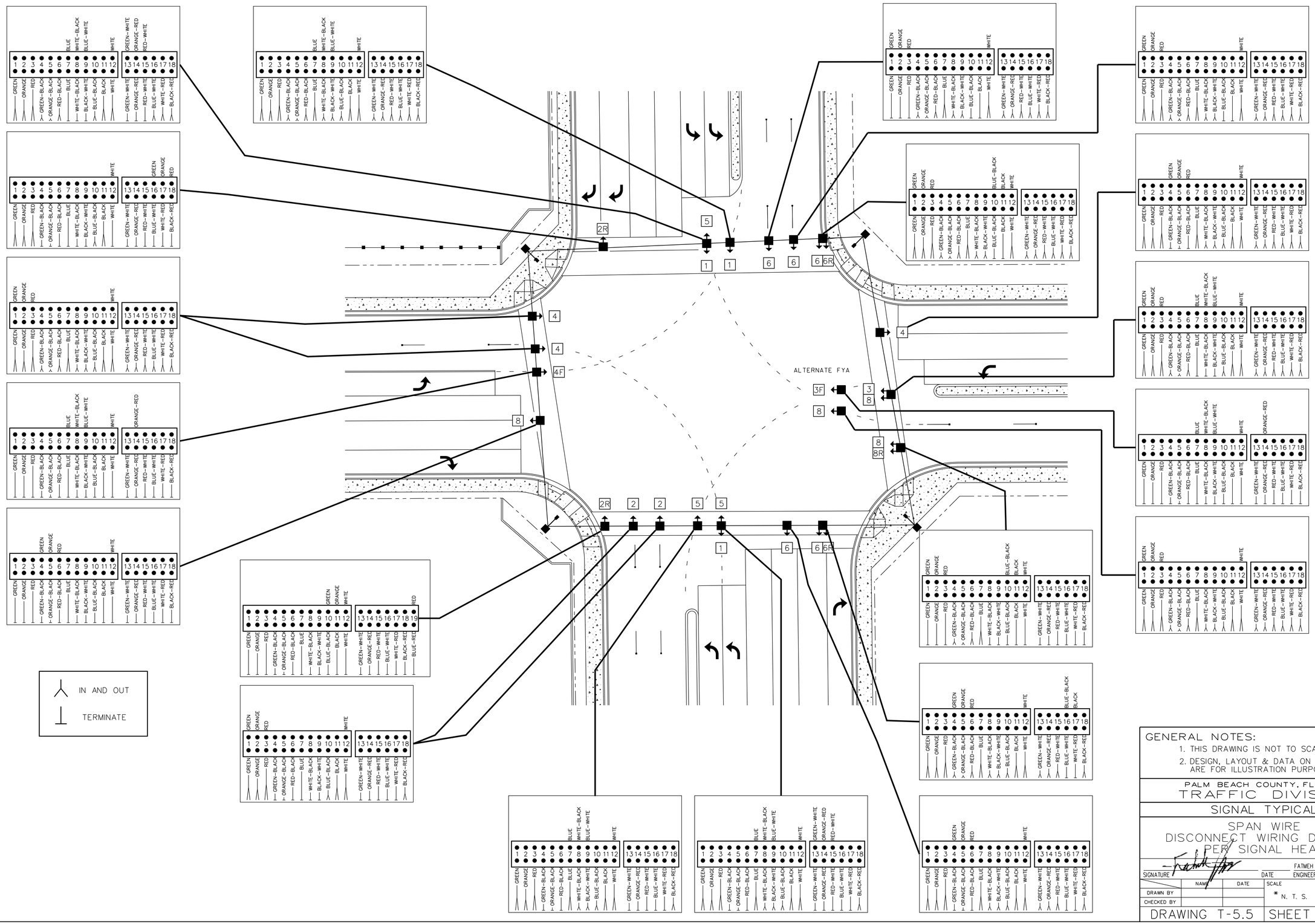

GENERAL NOTES:

1. THIS DRAWING IS NOT TO SCALE.
2. DESIGN, LAYOUT & DATA ON THIS SHEET ARE FOR ILLUSTRATION PURPOSE ONLY.

PALM BEACH COUNTY, FLORIDA
TRAFFIC DIVISION

SIGNAL TYPICAL

SPAN WIRE
DISCONNECT WIRING DIAGRAM
PER SIGNAL HEAD

SIGNATURE | DATE | FATMEH N. JAFAR, ENGINEER OF RECORD

	NAME	DATE	SCALE	CONTRACT NO.
DRAWN BY			* N. T. S.	
CHECKED BY				

DRAWING T-5.5 | SHEET 10 OF 29

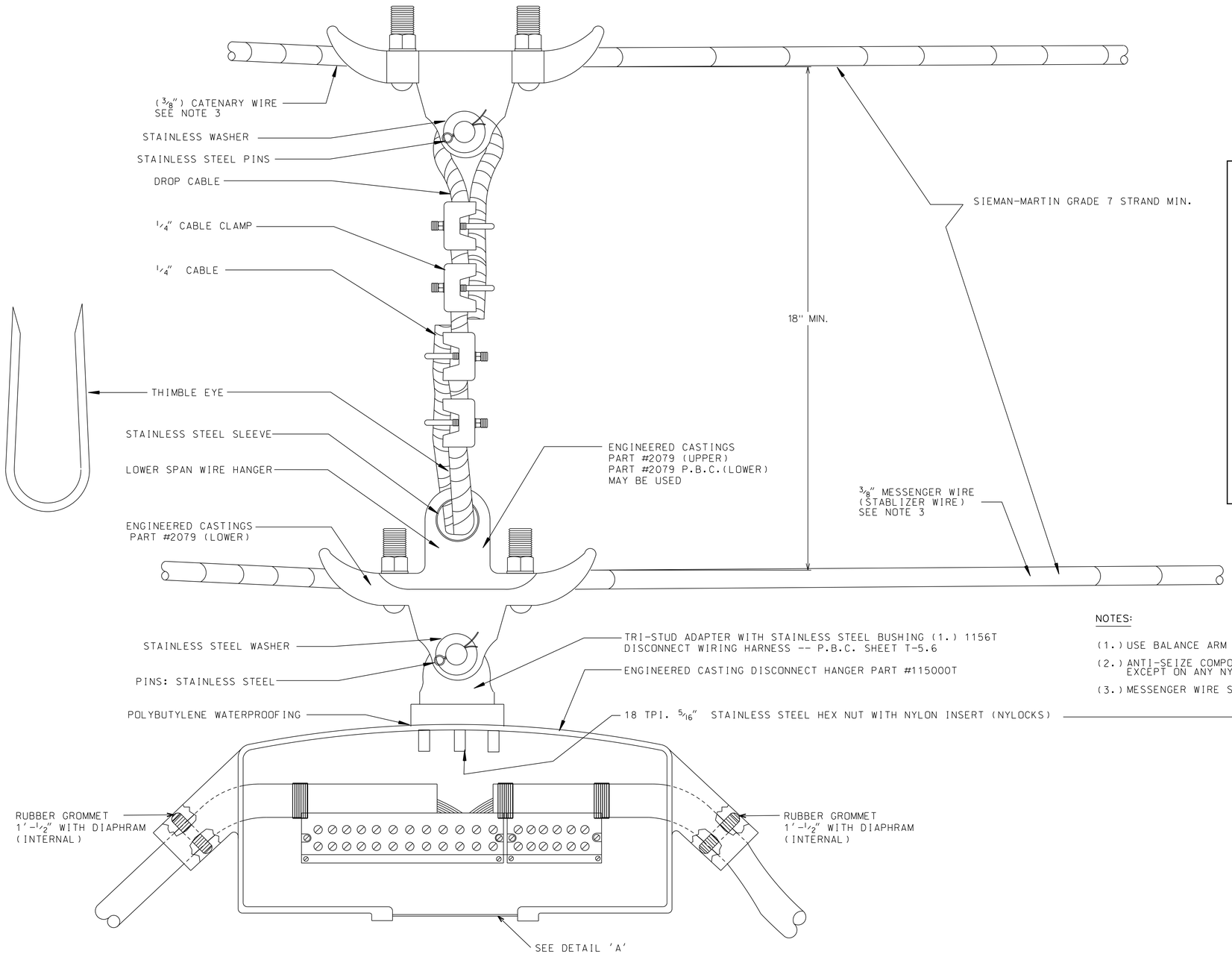

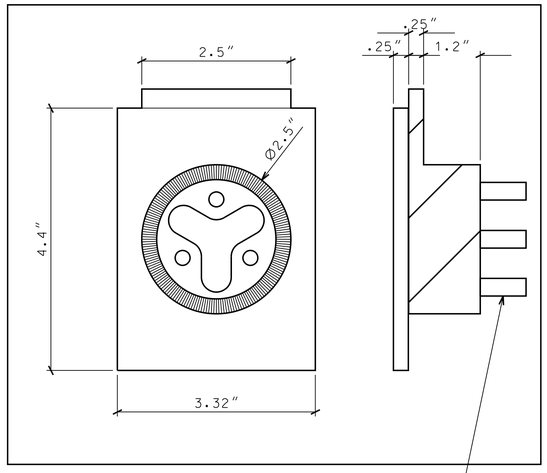

DETAIL 'A'

NOTES:

(1.) USE BALANCE ARM ADJUSTER (CHTL 2357 TYPE) AS ALTERNATE.

(2.) ANTI-SEIZE COMPOUND TO BE USED ON ALL CONNECTIONS EXCEPT ON ANY NYLON MATERIALS.

(3.) MESSENGER WIRE SIZE MAY VARY AS DETERMINED BY ENGINEER.

GENERAL NOTES:

1. THIS DRAWING IS NOT TO SCALE.
2. DESIGN, LAYOUT & DATA ON THIS SHEET ARE FOR ILLUSTRATION PURPOSE ONLY.

PALM BEACH COUNTY, FLORIDA
TRAFFIC DIVISION

SIGNAL TYPICAL

MODIFICATION TO SPAN WIRE INSTALLATION DETAIL OF FDOT STANDARD PLANS INDEX 634-001

SIGNATURE | DATE | FATMEH N. JAFAR, ENGINEER OF RECORD

	NAME	DATE	SCALE	CONTRACT NO.
DRAWN BY			N. T. S.	
CHECKED BY				

DRAWING T-5.6 | SHEET 11 OF 29

NOTE:

AFTER TERMINAL BLOCK IS WIRED, THE SIGNAL CABLE IS TO BE SECURED TO BLOCK WITH TIE WRAPS (MIN. OF 2).

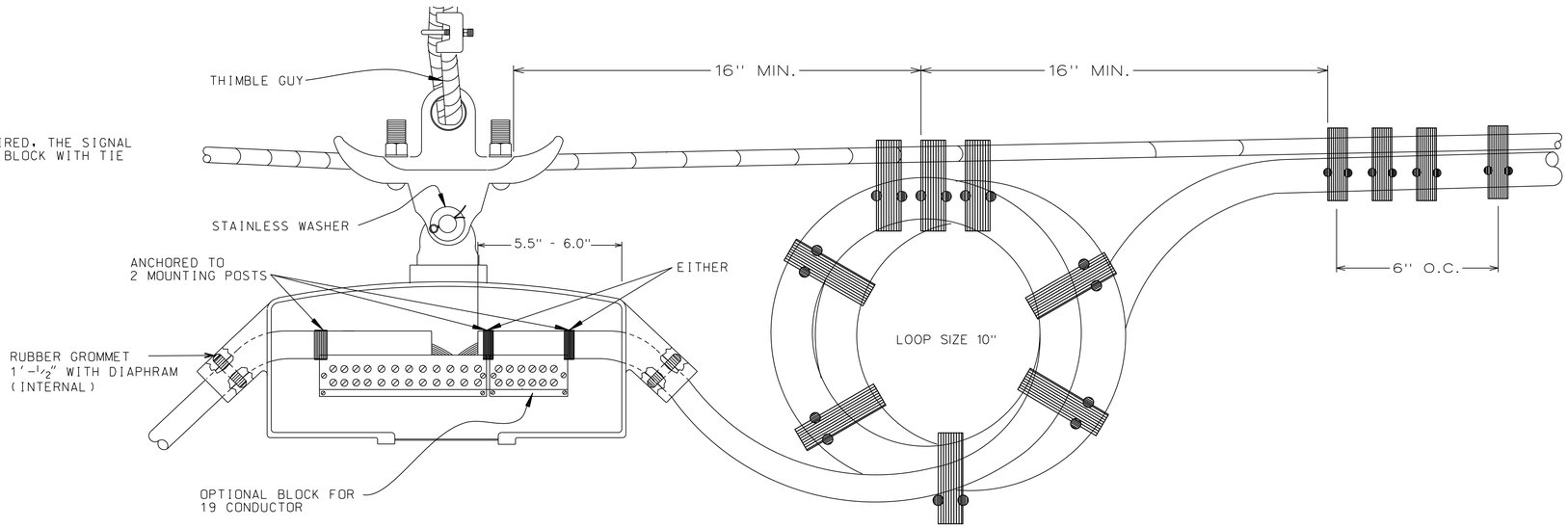

SIGNAL CABLE TIE-WRAP

1. DRIP LOOP TO BE TIE-WRAPPED WITH PANDUIT #BT2LH-TL0 (OR EQUAL)

CONDUCTOR COLOR CODE AND SEQUENCE CHART

CONDUCTOR	DISCONNECT WIRING BASE COLOR/TRACER	
1	GREEN	—
2	ORANGE	—
3	RED	—
4	GREEN	BLACK
5	ORANGE	BLACK
6	RED	BLACK
7	BLUE	—
8	WHITE	BLACK
9	BLACK	WHITE
10	BLUE	BLACK
11	BLACK	—
12	WHITE	—

CONDUCTOR	DISCONNECT WIRING FOR OPTIONAL BLOCK BASE COLOR/TRACER	
13	GREEN	WHITE
14	ORANGE	RED
15	RED	WHITE
16	BLUE	WHITE
17	WHITE	RED
18	BLACK	RED

WIRE: #14 THHN, 19 STRAND COPPER, NYLON COATED PVC INSULATION, GAS & OIL RESISTANT.

GENERAL NOTES:

1. THIS DRAWING IS NOT TO SCALE.
2. DESIGN, LAYOUT & DATA ON THIS SHEET ARE FOR ILLUSTRATION PURPOSE ONLY.

PALM BEACH COUNTY, FLORIDA
TRAFFIC DIVISION

SIGNAL TYPICAL

DETAIL - DISCONNECT WITH DOUBLE DRIP LOOP SIGNAL HEAD

SIGNATURE — DATE — FATMEH N. JAFAR, ENGINEER OF RECORD

	NAME	DATE	SCALE	CONTRACT NO.
DRAWN BY			* N. T. S.	
CHECKED BY				

DRAWING T-5.7 | SHEET 12 OF 29

ASSOCIATED PHASE MOVEMENTS

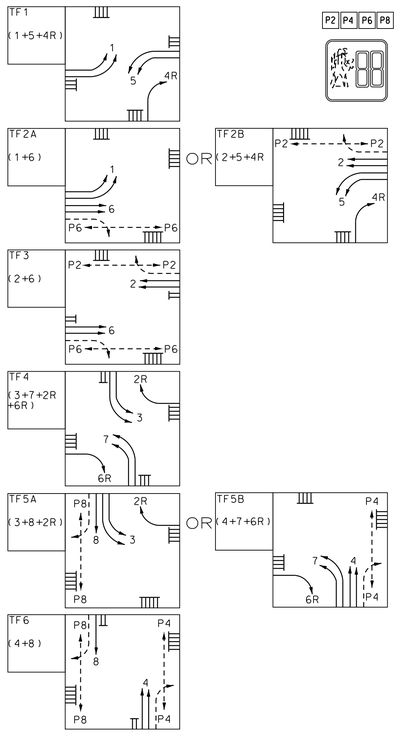

DETAIL OF SIGNAL HEADS

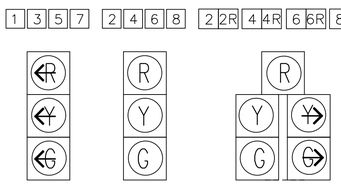

DETAIL OF SIGNS

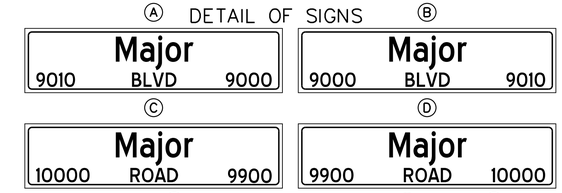

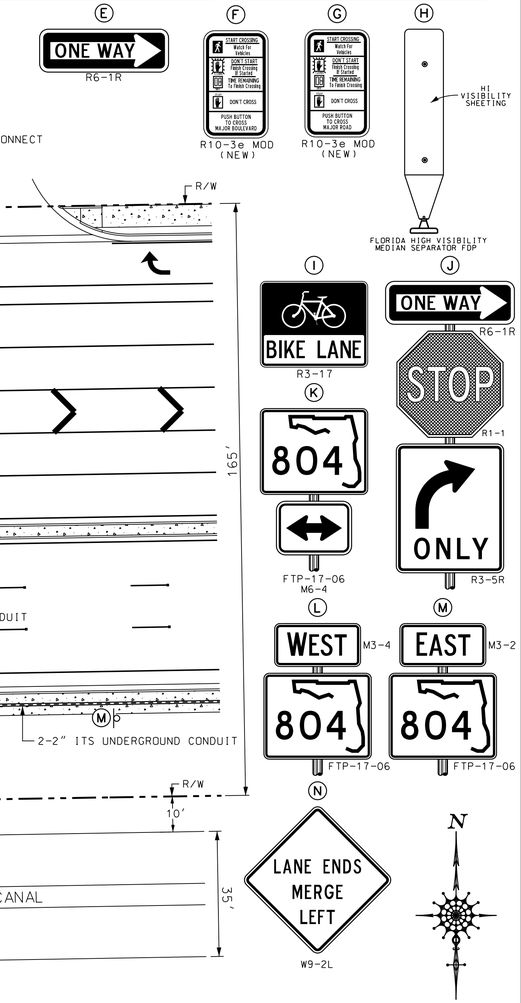

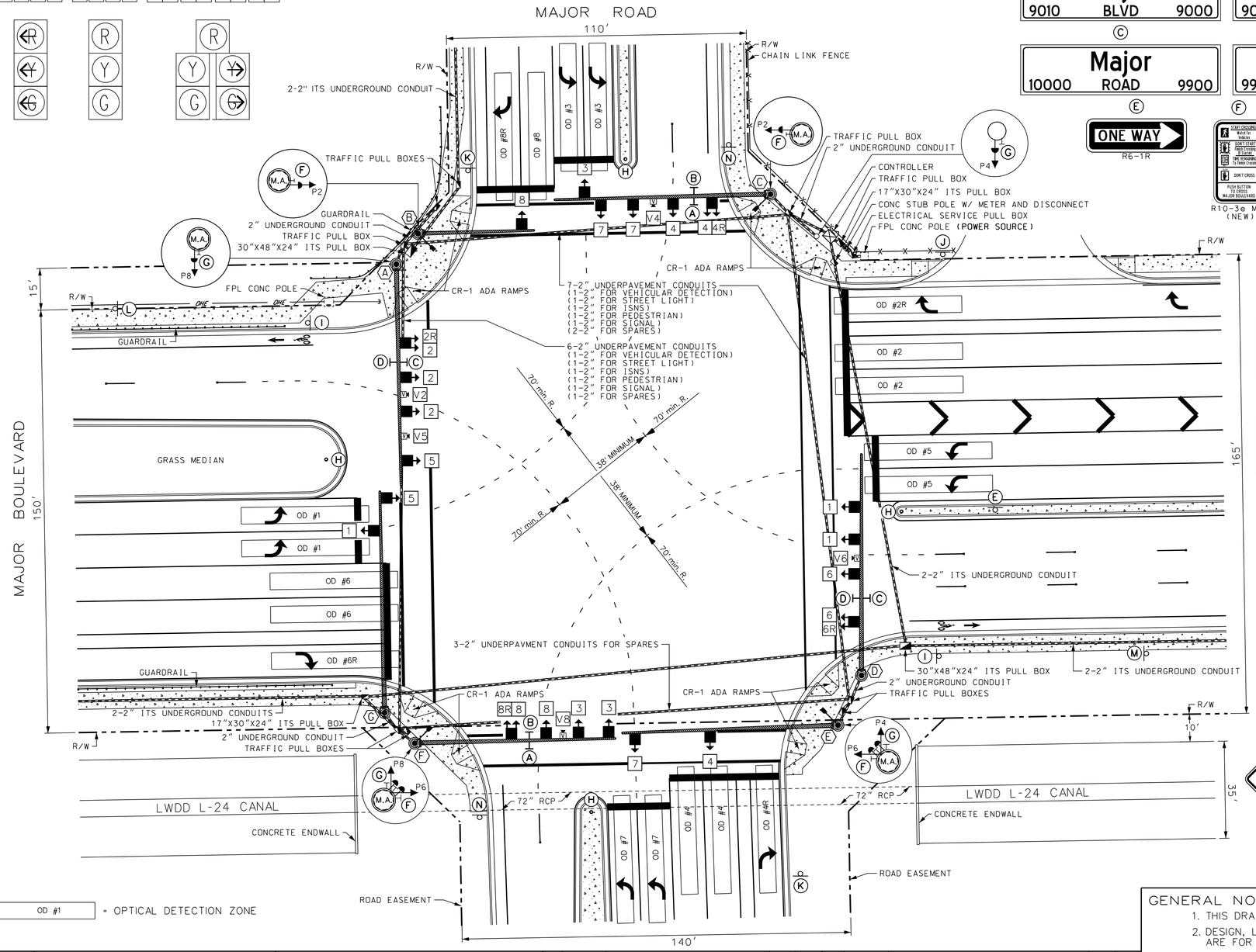

DESIGN NOTES:

1. LUMINAIRE LOCATIONS:
   NE, NW, SE, SW (PBC) (LED)
2. FLASHING OPERATION:
   ALL RED
3. SPEED LIMITS:
   MAJOR ROAD - 45 MPH
   MAJOR BLVD - 45 MPH
4. SIGNS "A", "B", "C" AND "D" ARE INTERNALLY ILLUMINATED (ISNS)

OD #1 = OPTICAL DETECTION ZONE

MAST ARM DATA

I.D. NO.	ASSEMBLY TYPE	LOCATION BY STATION/CORNER	ARM LENGTH	MOUNT HEIGHT	ANGLE BETWEEN DUAL ARMS	LUMINAIRE	COLOR
A	A78-P6/S	NORTH-WEST	78'	20'	-	NO	GALV
B	A40-P2/S/L	NORTH-WEST	40'	20'	-	YES	GALV
C	A78-P6/S/L	NORTH-EAST	76'	20'	-	YES	GALV
D	A78-P6/S	SOUTH-EAST	78'	20'	-	NO	GALV
E	A78-P6/S/L	SOUTH-EAST	76'	20'	-	YES	GALV
F	A70-P5/S/L	SOUTH-WEST	70'	20'	-	YES	GALV
G	A70-P5/S	SOUTH-WEST	70'	20'	-	NO	GALV

VIDEO DETECTOR CONNECTION

DETECTOR UNIT NO.	OPERATION	OD ZONE	CONNECTED TO TIMING FUNCTION
1	V2	OD-2.2R	TF2
2	V4	OD-4.4R.7	TF4.7
3	V6	OD-6.6R.1	TF1.6
4	V8	OD-8.8R.3	TF3.8
5	V5	OD-5	TF5

TRAFFIC VOLUMES

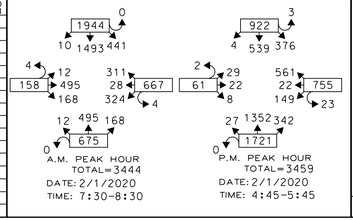

NO.	DATE	REVISIONS	BY	APP.	NO.	DATE	REVISIONS	BY	APP.

GENERAL NOTES:

1. THIS DRAWING IS NOT TO SCALE.
2. DESIGN, LAYOUT & DATA ON THIS SHEET ARE FOR ILLUSTRATION PURPOSE ONLY.

PALM BEACH COUNTY, FLORIDA
TRAFFIC DIVISION

SIGNAL TYPICAL

TYPICAL MAST ARM TRAFFIC SIGNAL OPERATION & INSTALLATION

SIGNATURE — DATE — FATMEH N. JAFAR, ENGINEER OF RECORD

	NAME	DATE	SCALE	CONTRACT NO.
DRAWN BY			N. T. S.	
CHECKED BY				

DRAWING T-6 — SHEET 13 OF 29

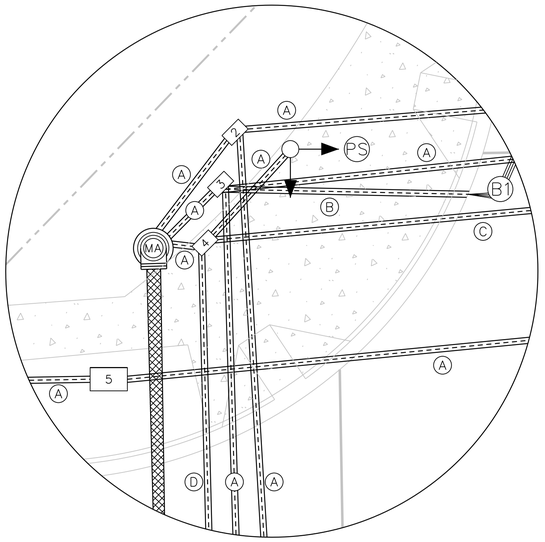

DETAIL "A"

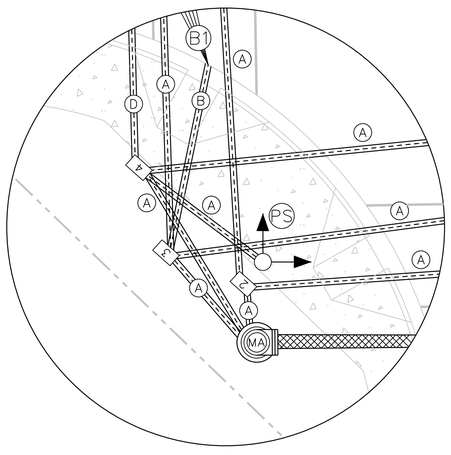

DETAIL "C"

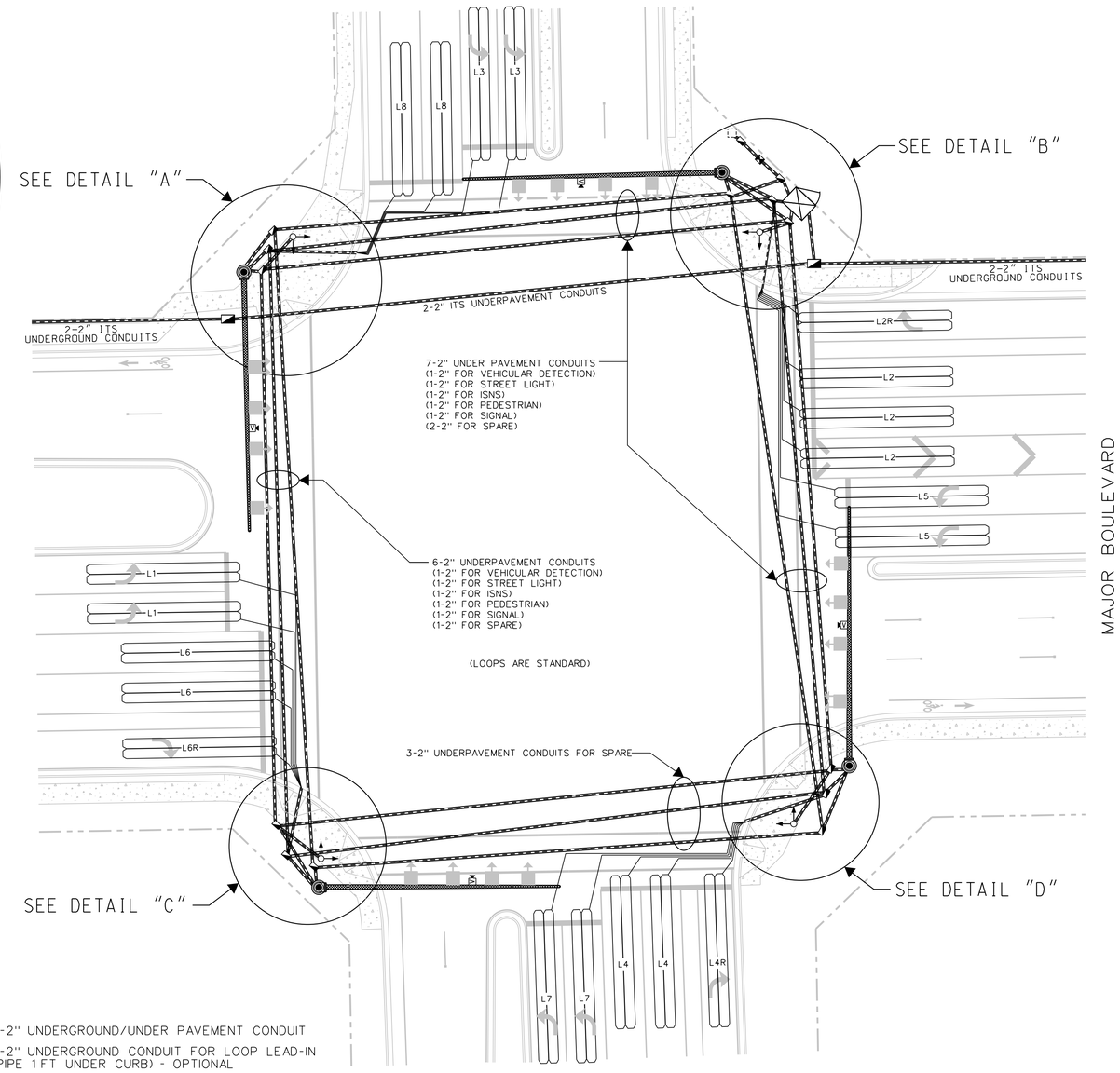

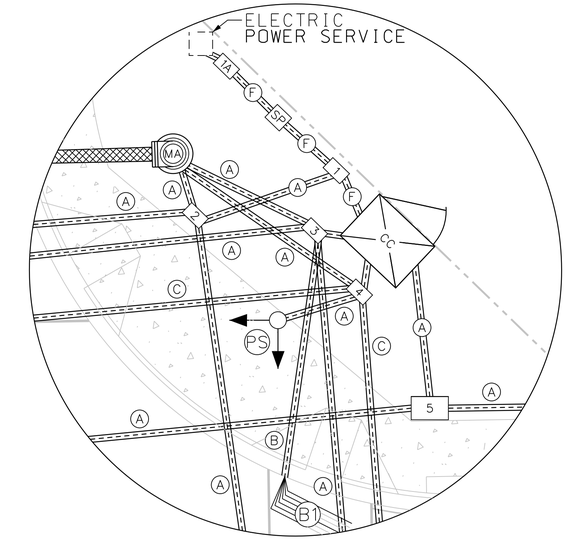

DETAIL "B"

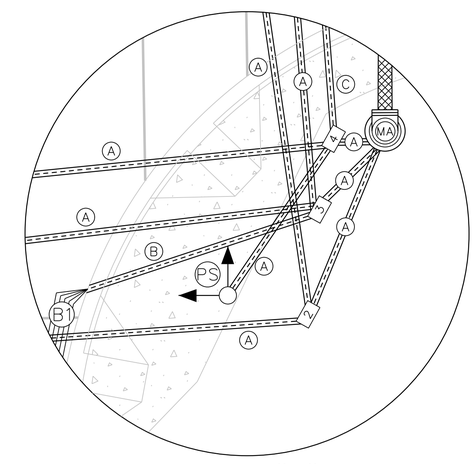

DETAIL "D"

LEGEND

CC = CONTROLLER CABINET
MA = MAST ARM
SP = STUB POLE FOR POWER SERVICE BREAKER BOX
PS = PEDESTRIAN SIGNAL
1 = PULL BOX FOR POWER SERVICE
1A = PULL BOX FOR POWER SERVICE SHALL BE 17X30X12 13X24X12 OPTIONAL AS DETERMINED BY PBC ENGINEER
2 = PULL BOX FOR STREET LIGHT & ILLUMINATED STREET NAME SIGN
3 = PULL BOX FOR VIDEO
4 = PULL BOX FOR SIGNAL & PEDESTRIAN CABLE
5 = PULL BOX (30X48X24) FOR ITS OPTIONAL SIZE (17X30X24) OR AS DETERMINED BY PBC ENGINEER

A = 2-2" UNDERGROUND/UNDER PAVEMENT CONDUIT
B = 2-2" UNDERGROUND CONDUIT FOR LOOP LEAD-IN (PIPE 1FT UNDER CURB) - OPTIONAL
B1 = LOOP LEAD-IN - OPTIONAL
C = 4-2" UNDERGROUND/UNDER PAVEMENT CONDUITS
(1-2" FOR SIGNAL)
(1-2" FOR PEDESTRIAN CABLE)
(2-2" FOR SPARE)
D = 3-2" UNDERGROUND/UNDER PAVEMENT CONDUITS
(1-2" FOR SIGNAL)
(1-2" FOR PEDESTRIAN CABLE)
(1-2" FOR SPARE)
F = 1-1" UNDERGROUND CONDUIT

NOTES

1. ANY CONDUIT ABOVE GROUND SHALL BE ALUMINUM OR HD GALVANIZED.
2. ANY CONDUIT BELOW GROUND SHALL BE SCHEDULE 40 PVC.
3. ALL CONDUIT TO BE PLUMBED, CENTERED AND NO LOWER/HIGHER THAN THE MIDPOINT IN THE PULL BOX.
4. IF VIDEO AND LOOPS ARE USED SIMULTANIOUSLY AT AN INTERSECTION THEY SHOULD BE INSTALLED PER FDOT STANDARDS.
5. ALL PULL BOXES FOR POWER SERVICE SHALL BE 17X30X12 OR AS DETERMINED BY PBC ENGINEER.
6. ALL PULL BOXES FOR SIGNAL, PEDS, OR LOOPS SHALL BE 17X30X12 OR AS DETERMINED BY PBC ENGINEER.
7. ALL SIGNAL CABLE MUST BE HELD BY A STRAIN RELIEF (LEGRAND FC0750FSS) ATTACHED TO A J HOOK INSIDE OF MAST ARM. TO USE APPROVED EQUIVALENT, SHOP DRAWINGS SHALL BE SUBMITTED TO PBC ENGINEER FOR PRE APPROVAL. WRITTEN APPROVAL FOR SHOP DRAWINGS SHALL BE PROVIDED AT TIME OF FINAL SIGNAL INSPECTION.
8. ANY UNUSED CONDUIT SHALL BE CAPPED WITH AN END CAP.

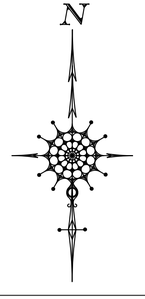

GENERAL NOTES:
1. THIS DRAWING IS NOT TO SCALE.
2. DESIGN, LAYOUT & DATA ON THIS SHEET ARE FOR ILLUSTRATION PURPOSE ONLY.

PALM BEACH COUNTY, FLORIDA
TRAFFIC DIVISION

SIGNAL TYPICAL

CABLE DISTRIBUTION SYSTEM FOR MAST ARM TRAFFIC SIGNAL INSTALLATION

SIGNATURE | DATE | FATMEH N. JAFAR, ENGINEER OF RECORD

	NAME	DATE	SCALE	CONTRACT NO.
DRAWN BY			N. T. S.	
CHECKED BY				

DRAWING T-6.1 | SHEET 14 OF 29

NOTES:

1. LENGTHS OF CONDUIT ARE DETERMINED BY SUBJECT DESIGN.
2. MINIMUM 3 PULL BOXES NEXT TO CONTROLLER.
3. ILLUMINATED STREET NAME SIGNS (ISNS) AND LUMINAIRE CIRCUITS TO BE RUN SEPARATELY.
4. FOR GROUND ROD INFORMATION SEE NOTES ON T-6.3.
5. LE GRAND (FC075OFSS) STRAIN RELIEF DEVICE SHALL BE INSTALLED IN MAST ARMS.

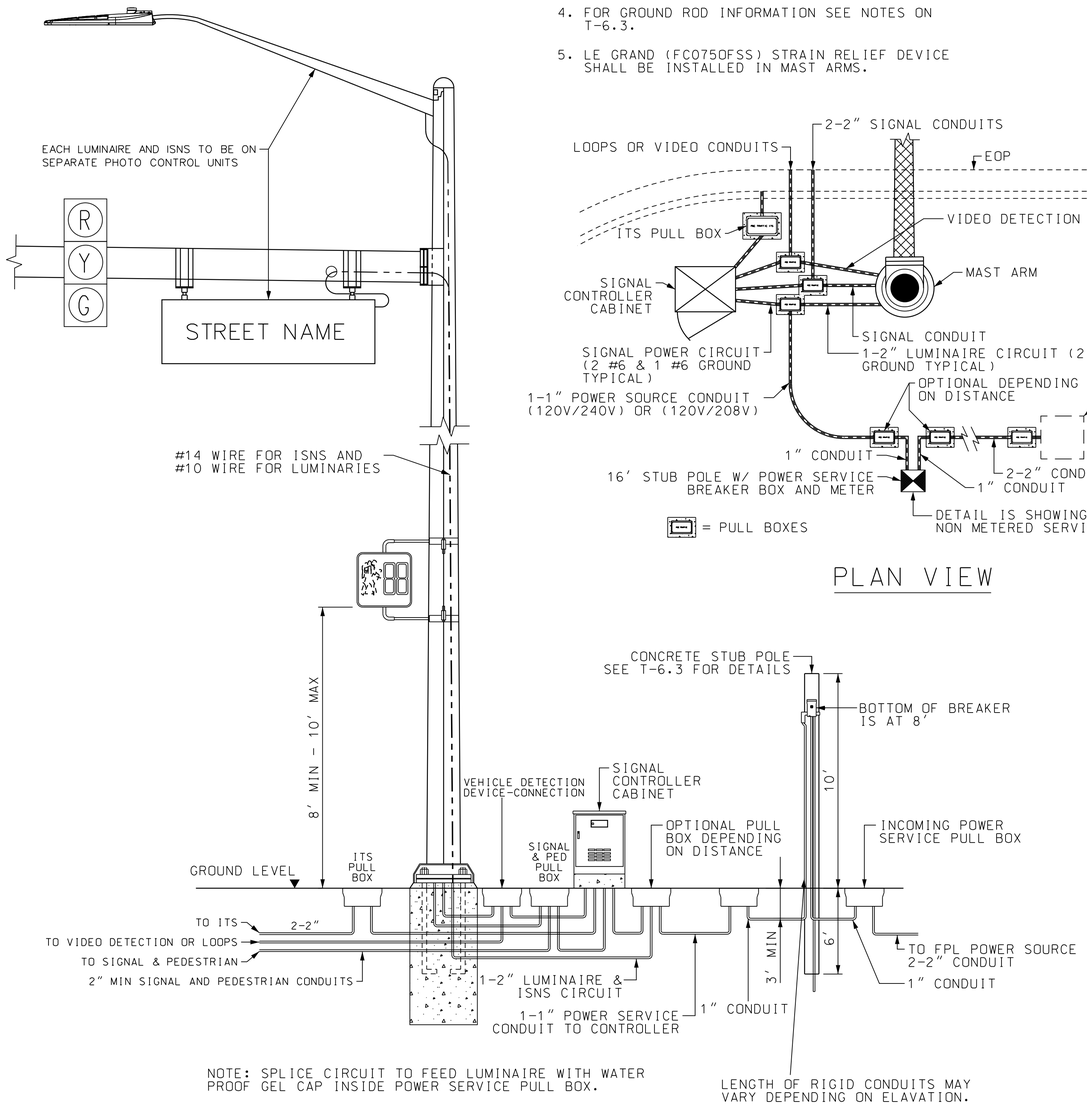

MAST ARM INSTALLATION

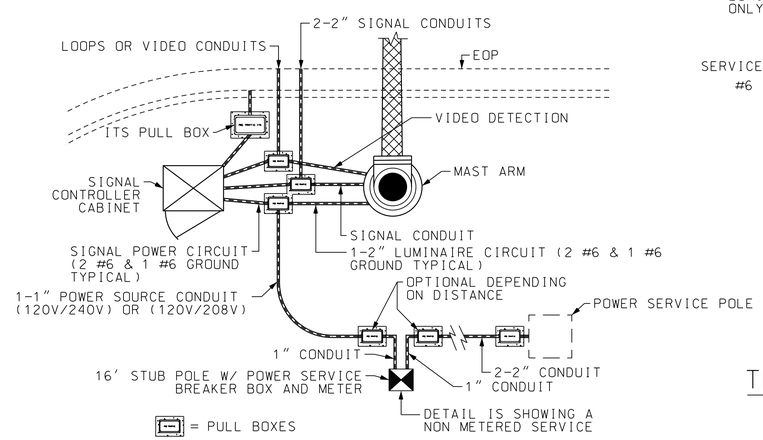

PLAN VIEW

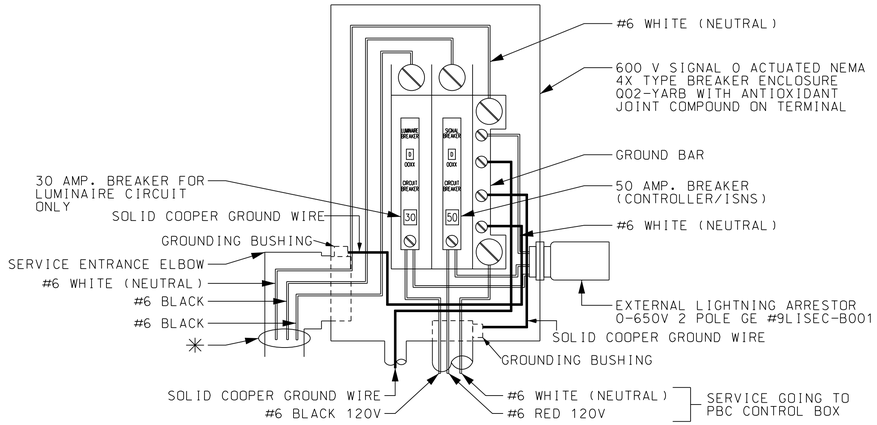

✳ FPL ELECTRICAL SERVICE CONNECTION (SINGLE PHASE 3 - WIRE 5KVA 120 / 240 V OR 120 / 208 V SYSTEM) TO SERVICE ENTRANCE FITTING BY CONTRACTOR. STRANDED #6 COPPER MIN.

NOTE: BREAKER BOX SQUARE D MODEL #QO24L70RB, OR APPROVED EQUIVALENT THAT ACCEPTS SQUARE D BREAKERS, SINGLE POLE, "QO" STYLE.

TRIPLEX SERVICE DISCONNECT/BREAKER ASSEMBLY

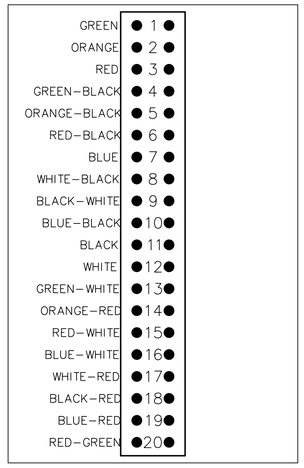

HAND HOLE / TERMINAL BLOCK (TERMINAL COMPARTMENT) NOTES:

1. TEMRINATE ENTIRE HAND HOLE CABLE TO TERMINAL BLOCK.
2. REMAINING SPARES TO BE TAPED UP AND NOT GROUNDED AT CABINET.
3. OVERHEAD SIGNAL SPARES & ILLUMINATED STREET NAME SIGNS (ISNS) TO BE GROUNDED AT HAND HOLES WITH GROUND LUGS. (SEE DETAIL)
4. NO MORE THAN 3 FORKS PER TERMINAL ON TERMINAL STRIP (JUMPERS CAN BE USED AS NEEDED).
5. ONE TERMINATION PER FORK CONNECTOR. DUAL TERMINATION ONTO A YELLOW FORK IS NOT ACCEPTABLE.

HAND HOLE / TERMINAL BLOCK DETAIL (TERMINAL COMPARTMENT)

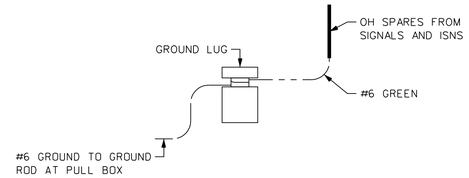

HAND HOLE GROUNDING (SEE NOTE 3)

GENERAL NOTES:

1. THIS DRAWING IS NOT TO SCALE.
2. DESIGN, LAYOUT & DATA ON THIS SHEET ARE FOR ILLUSTRATION PURPOSE ONLY.
3. STUB POLE TO BE USED ON EXISTING TRAFFIC SIGNLS WITH NO METER INSTALLATION.

PALM BEACH COUNTY, FLORIDA
TRAFFIC DIVISION

SIGNAL TYPICAL

DETAIL - SERVICE DISCONNECT/BREAKER ASSEMBLY, MAST ARM HAND HOLE & MAST ARM INSTALLATION

SIGNATURE	DATE	FATMEH N. JAFAR ENGINEER OF RECORD	
	NAME	DATE	SCALE	CONTRACT NO.
DRAWN BY			N. T. S.	
CHECKED BY				

DRAWING T-6.2 | SHEET 15 OF 29

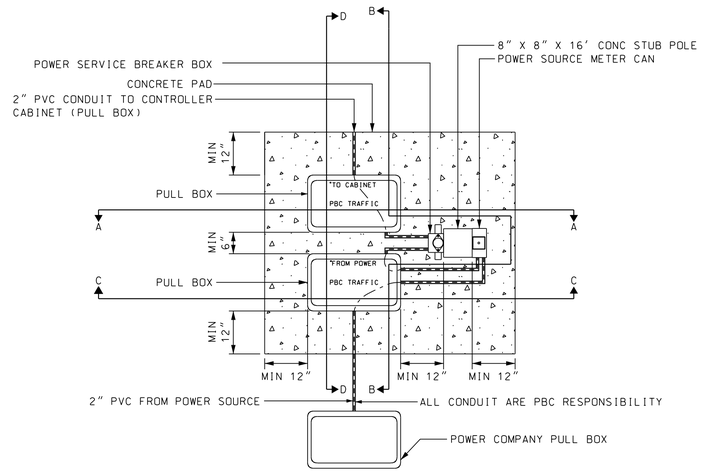

DETAIL NOTES:

1. MILBANK METER SOCKET (CATALOG #UAP3505-XL-TG-HSP SERIES U-125 TYPE 3R ENCLOSURE 125 AMP MAX OR PBC APPROVED EQUAL) EACH METER TO HAVE BYPASS LEVER.
2. BREAKER BOX SQUARE D MODEL #QO24L70RB, OR PBC APPROVED EQUAL.
3. CLOSE NIPPLE & GROUNDING BUSHING ON LB. GROUNDING BUSHING ON OFFSET NIPPLES AND METAL CONDUIT ENDS IN PULL BOX.
4. RUN #6 BARE SOLID COPPER WIRE FROM BREAKER BOX DOWN THROUGH 1/2" PVC CONDUIT INTO CABINET PULL BOX. THE #6 BARE SOLID COPPER WIRE CONTINUES IN PULL BOX AND CONNECTS TO 5/8" GROUND ROD.
5. RUN #6 BARE SOLID COPPER WIRE FROM METER CAN DOWN THROUGH 1/2" PVC CONDUIT INTO POWER SOURCE PULL BOX. THE #6 BARE SOLID COPPER WIRE CONTINUES IN PULL BOX AND CONNECTS TO 5/8" GROUND ROD.
6. BOTH 5/8" GROUND RODS ARE BONDED USING #6 GREEN STRANDED COPPER WIRE RUNNING IN 2" PVC UG CONDUIT CONNECTING POWER SOURCE PULL BOX AND CONTROLLER CABINET PULL BOX.
7. RUN #6 GREEN STRANDED COPPER FROM GROUND ROD IN CONTROLLER CABINET SIDE PULL BOX TO INTERSECTION.
8. EACH PULL BOX SHALL HAVE AT LEAST 20" OF WIRE SLACK FOR EACH WIRE.
9. WHEN COMPLETED ALL BOLTS SHALL BE INSTALLED IN PULL BOX COVERS.
10. FOR BREAKER BOX DETAIL SEE SHEET T-6.2
BREAKER BOX TO HAVE 6" SLACK PER EACH WIRE.

FROM POWER SOURCE BOX TO METER CAN:	FROM METER TO BREAKER BOX:	FROM BREAKER BOX TO LOADS:
#6 BLACK STRANDED	#6 BLACK STRANDED	#6 BLACK STRANDED (LUMINAIRES AND ISNS)
#6 BLACK STRANDED	#6 BLACK STRANDED	#6 RED STRANDED (CABINET)
#6 WHITE STRANDED	#6 WHITE STRANDED	#6 WHITE STRANDED (NEUTRAL)
		#6 GREEN STRANDED (GROUND)

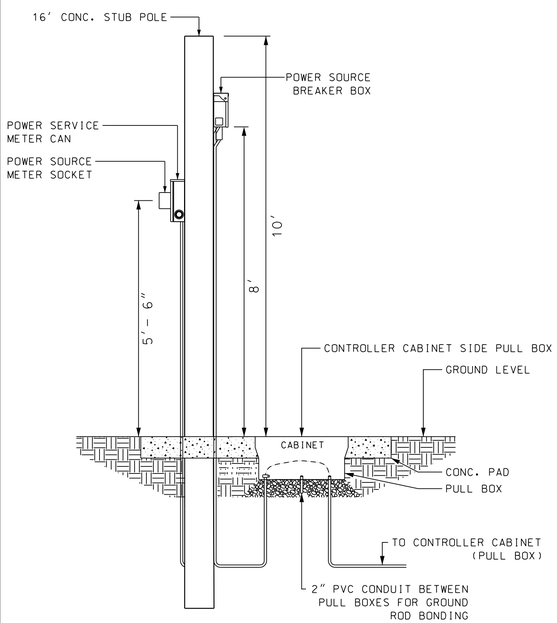

STUB POLE ELEVATION
(CONTROLLER CABINET SIDE DETAILS)
SECTION A-A

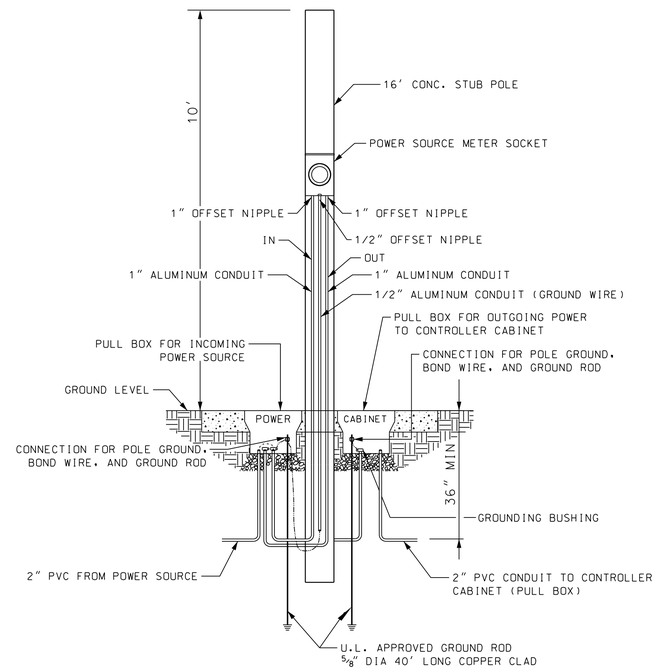

STUB POLE POWER SOURCE METER DETAIL VIEW
SECTION B-B

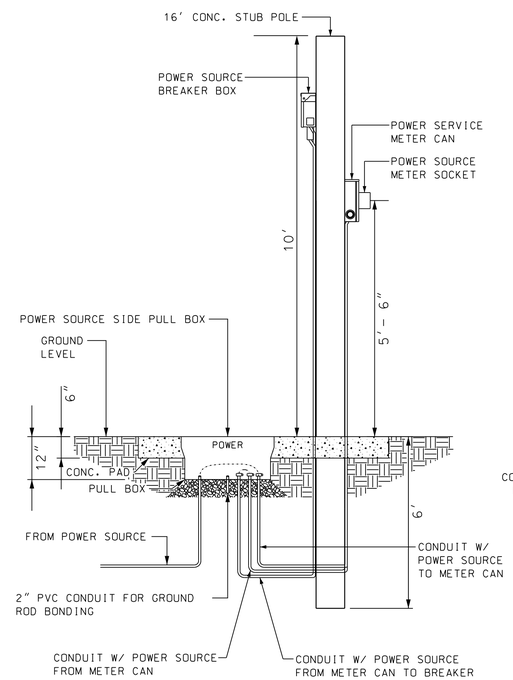

STUB POLE ELEVATION
(POWER SOURCE SIDE DETAILS)
SECTION C-C

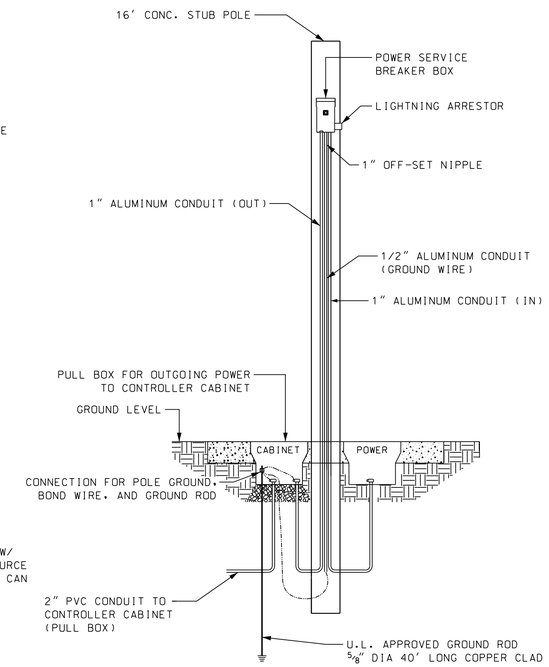

STUB POLE BREAKER BOX DETAIL VIEW
SECTION D-D

GROUND ROD NOTES:

1. GROUND RODS MUST BE 5/8" DIA COPPER CLAD STEEL MEETING UL 467 REQUIREMENTS.
2. GROUND ROD LENGTH MUST BE A MINIMUM OF 10' AND BE MANUFACTURED FOR THE SOLE PURPOSE OF PROVIDING ELECTRICAL GROUNDING.
3. GROUND ROD ASSEMBLIES CONSISTING OF ONE OR MORE GROUND RODS COUPLED TOGETHER SHALL BE A MINIMUM OF 40', EARTHED AT A SINGLE POINT, WITHOUT DISRUPTING THE ELECTRICAL CONTINUITY.
4. ALL GROUND ROD CONNECTIONS INSIDE PULL BOXES SHALL BE MADE USING EXOTHERMIC WELDS (ERICO TYPE NX CONNECTIONS OR APPROVED EQUAL).
5. ALL GROUND ROD CONNECTIONS INSIDE THE CONTROLLER CABINET OR PEDESTRIAN BASE SHALL BE MECHANICAL CONNECTIONS. BEFORE CONNECTION IS MADE ALL NON CONDUCTING SURFACE COATINGS MUST BE REMOVED AND AN ANTI OXIDANT COMPOUND MUST BE APPLIED.
6. FOR THE FOLLOWING DEVICES A RESISTANCE TO GROUND OF NO MORE THAN 5 OHMS MUST BE OBTAINED.

MULITPLE GROUND RODS TOTALING A MAX OF 80'	SINGLE GROUND ROD ASSEMBLIES
A. POWER SERVICE FOR TRAFFIC CONTROL DEVICES.	A. PEDESTALS FOR PEDESTRIAN SIGNALS
B. SIGNAL AND ITS CABINETS.	B. SIGNAL CABLE / SPAN WIRE
C. PULL BOXES	C. AERIAL INTERCONNECT MESSENGER WIRE

GENERAL NOTES:

1. THIS DRAWING IS NOT TO SCALE.
2. DESIGN, LAYOUT & DATA ON THIS SHEET ARE FOR ILLUSTRATION PURPOSE ONLY.
3. STUB POLE TO BE USED WITH POWER SOURCE METER.

PALM BEACH COUNTY, FLORIDA
TRAFFIC DIVISION

SIGNAL TYPICAL

DETAIL - POWER SOURCE METER & BREAKER BOX STUB POLE

SIGNATURE	DATE	FATMEH N. JAFAR ENGINEER OF RECORD		
	NAME	DATE	SCALE	CONTRACT NO.
DRAWN BY			N. T. S.	
CHECKED BY				

DRAWING T-6.3 | SHEET 16 OF 29

NOTES:

1. EACH PEDESTRIAN HEAD WILL BE FED WITH ONE SEVEN CONDUCTOR CABLE FOR PEDESTRIAN SIGNAL HEAD AND ONE FOUR CONDUCTOR CABLE FOR PEDESTRIAN DETECTOR. THESE CABLES WILL RUN FROM PEDESTRIAN SIGNAL AND DETECTOR DIRECTLY TO CONTROL BOX (NO SPLICES).
2. HOOK UP FOR PEDESTALS-
   THERE WILL BE ONE 4 PIN & ONE 8 PIN JIFFY HARNESS CRIMPED TO CABLES IN THE PEDESTAL. THESE HARNESSES WILL HAVE THE FEMALE END ON THE FEED SIDE OF CABLE AND THE MALE END ON THE PEDESTRIAN SIDE. THE LOCKING TABS MUST BE CUT OFF TO ENSURE BREAK-A-WAY PROTECTION. THE JIFFY CONNECTOR TO BE POSITIONED IN PELCO BASE AT TOP OF BASE TO AVOID WATER INTRUSION. ADD SILICON OR CAULKING AT BASE OF PELCO FOR WATER INTRUSION PROTECTION.
3. IN FLASHER-CONVERTIBLE INSTALLATIONS, A PULL BOX IS TO BE INSTALLED AT THE LOCATION OF THE FUTURE PEDESTRIAN SIGNAL PEDESTAL BASE. THE PULL BOX IS TO CONTAIN ADEQUATE WIRING FOR HOOK-UP OF FUTURE PEDESTRIAN SIGNAL.
4. BOND PED FIXTURE TO GROUND ROD.
5. ALL PUSH BUTTONS SHALL BE NO MORE THAN 10" FROM BACK OF SIDEWALK
6. FOR GROUND ROD INFORMATION SEE NOTED ON T-6.3.
7. PED PUSH BUTTON SHALL BE BULLDOG TYPE BDL3-B-CE

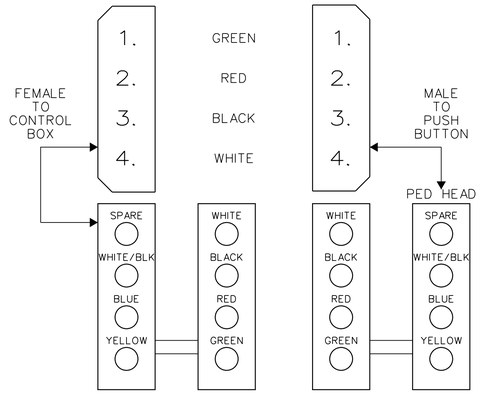

JIFFY HARNESS WIRING DIAGRAM
(4 PIN AND 8 PIN)

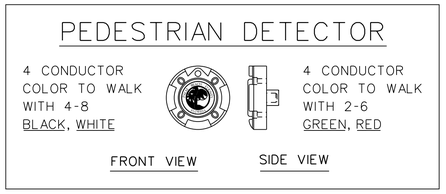

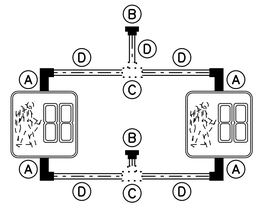

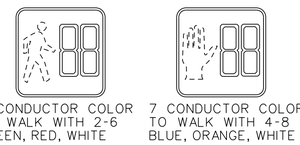

COUNTDOWN PEDESTRIAN SIGNAL

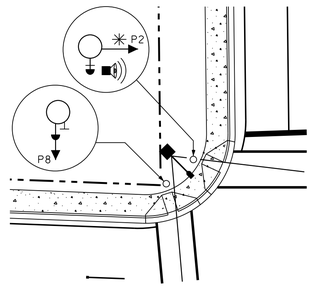

✳ P2 AUDIBLE DETECTOR

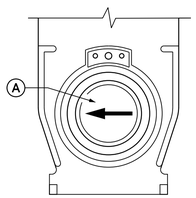

ACCESSIBLE (AUDIBLE) PUSH BUTTON

DETAIL FOR WARNING PEDESTRIAN FLASHER

DETAIL FOR ACCESSIBLE PEDESTRIAN DETECTOR IN COMBINATION WITH COUNTDOWN PEDESTRIAN SIGNAL SIGN

(A) THIS BUTTON SHOULD BE PRESSED TO PLACE A PED CALL. THE RAISED ARROW INDICATES THE DIRECTION THROUGH THE CROSSWALK. THE BUTTON VIBRATES TO INDICATE THE WALK SIGN IS ON.

ACCESSIBLE (AUDIBLE)
PEDESTRIAN DETECTOR DETAIL

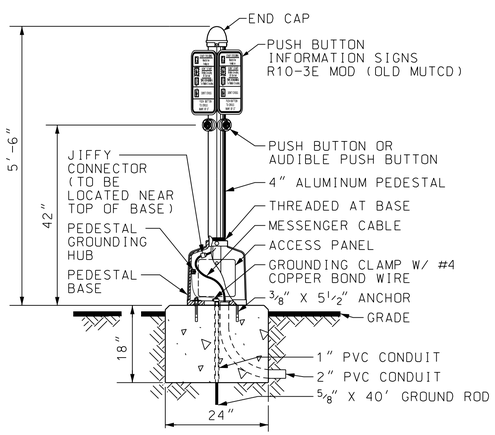

PED MONUMENT DETAIL

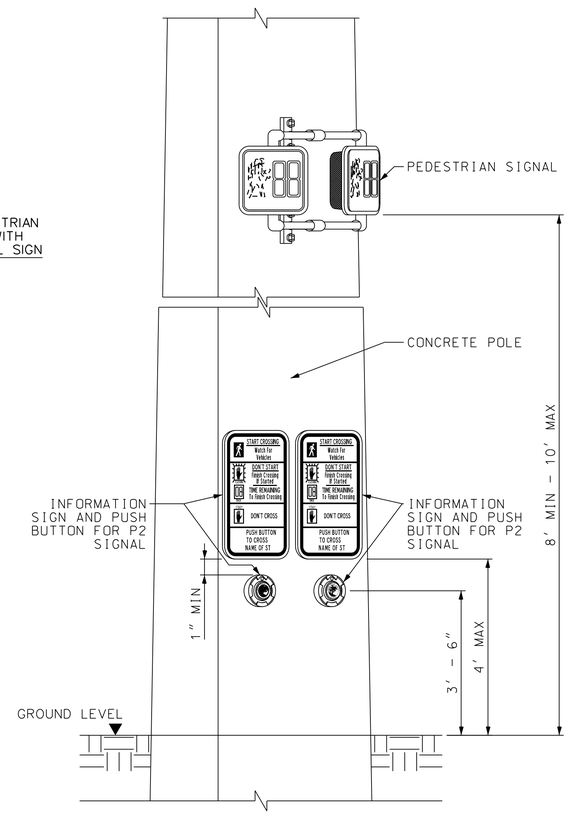

PEDESTRIAN FEATURES ON CONCRETE POLE

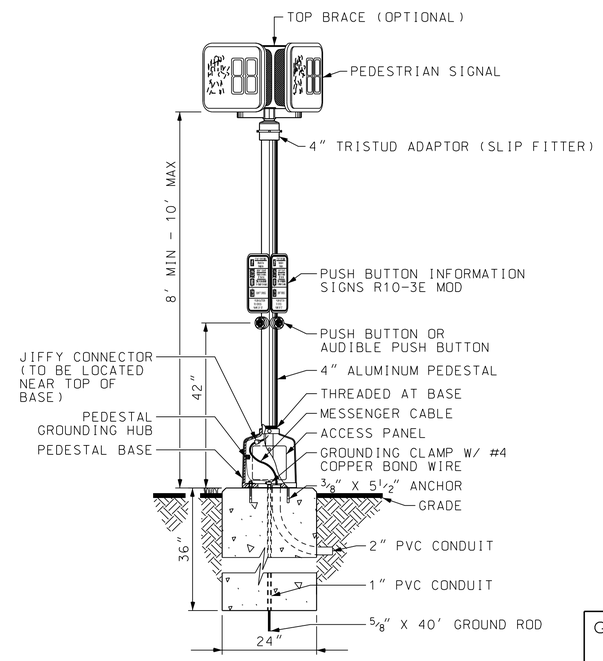

PEDESTRIAN FEATURES ON PEDESTAL

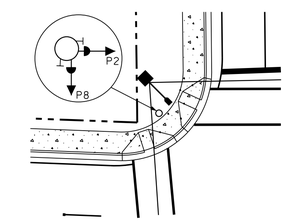

PEDESTRIAN FEATURES
LAYOUT DETAIL

GENERAL NOTES:
1. THIS DRAWING IS NOT TO SCALE.
2. DESIGN, LAYOUT & DATA ON THIS SHEET ARE FOR ILLUSTRATION PURPOSE ONLY.

PALM BEACH COUNTY, FLORIDA
TRAFFIC DIVISION

SIGNAL TYPICAL

PEDESTRIAN SIGNAL, SIGN, & EQUIPMENT INSTALLATION.

SIGNATURE		DATE	FATMEH N. JAFAR ENGINEER OF RECORD	
	NAME	DATE	SCALE	CONTRACT NO.
DRAWN BY			N. T. S.	
CHECKED BY				
DRAWING T-7			SHEET 17 OF 29	

NOTES:

1. FOR GROUND ROD INFORMATION SEE NOTES ON T-6.3.
2. PEDESTAL BASE DOORS MUST BE INSTALLED FACING TRAFFIC.
3. PEDESTALS MUST BE SECURED TO BASE WITH SET SCREW TO PREVENT MOVEMENT.

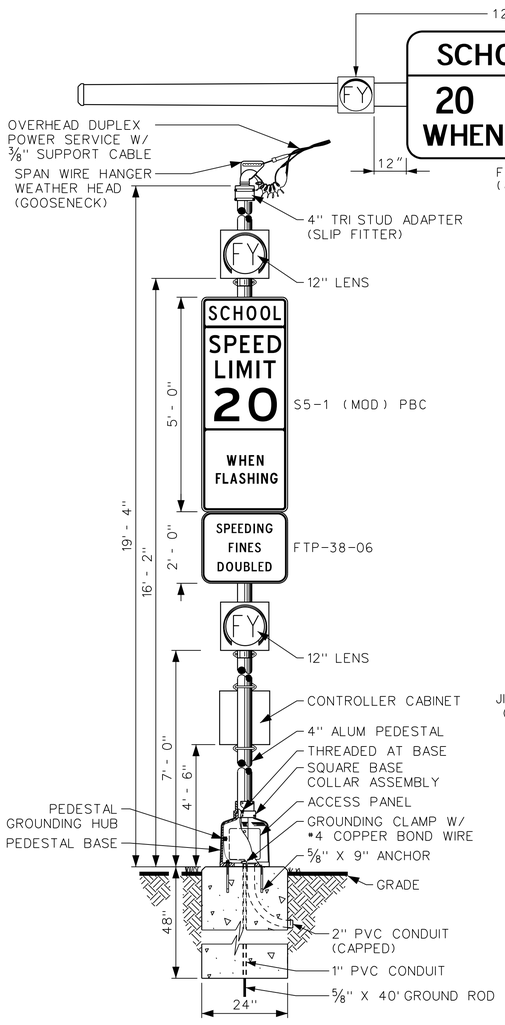

PEDESTAL SCHOOL ZONE FLASHER
OVERHEAD POWERED DETAIL

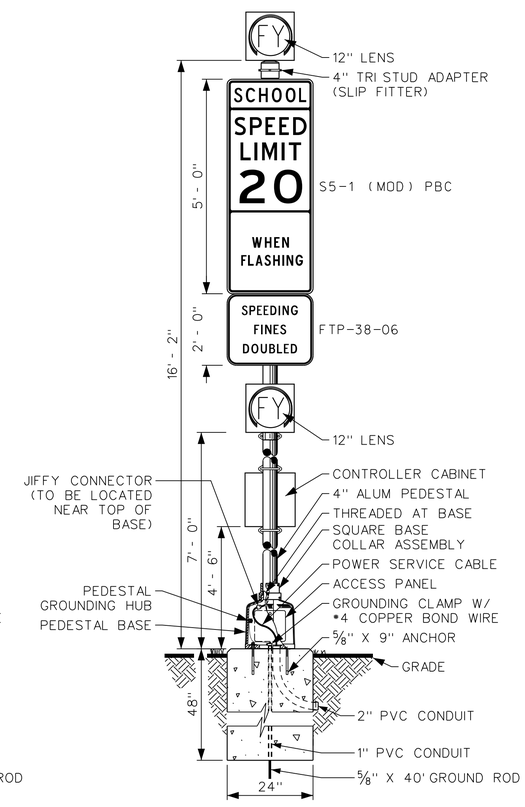

PEDESTAL SCHOOL ZONE FLASHER
UNDERGROUND POWERED DETAIL

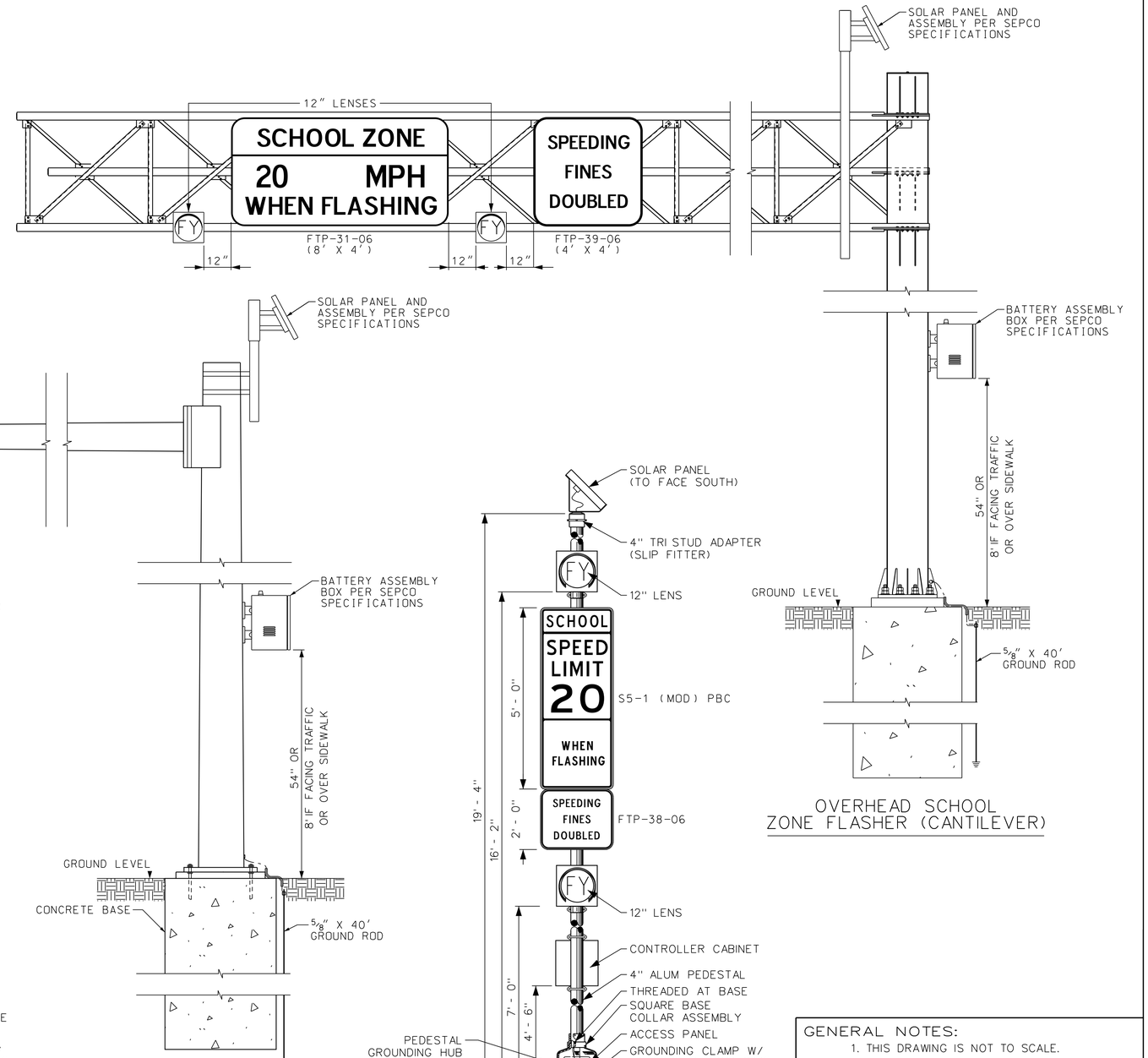

OVERHEAD SCHOOL
ZONE FLASHER (MAST ARM)

OVERHEAD SCHOOL
ZONE FLASHER (CANTILEVER)

PEDESTAL SCHOOL ZONE FLASHER
SOLAR POWERED DETAIL

GENERAL NOTES:

1. THIS DRAWING IS NOT TO SCALE.
2. DESIGN, LAYOUT & DATA ON THIS SHEET ARE FOR ILLUSTRATION PURPOSE ONLY.

PALM BEACH COUNTY, FLORIDA
TRAFFIC DIVISION
SIGNAL TYPICAL

DETAIL - SCHOOL ZONE FLASHER

SIGNATURE		DATE	FATMEH N. JAFAR ENGINEER OF RECORD	
	NAME	DATE	SCALE	CONTRACT NO.
DRAWN BY			N. T. S.	
CHECKED BY				

DRAWING T-8 | SHEET 18 OF 29

NOTES:

1. FOR GROUND ROD INFORMATION SEE NOTES ON T-6.3.
2. PEDESTAL BASE DOORS MUST BE INSTALLED FACING TRAFFIC.
3. PEDESTALS MUST BE SECURED TO BASE WITH SET SCREW TO PREVENT MOVEMENT.
4. ALL PUSH BUTTONS SHALL BE NO MORE THAN 10" FROM THE BACK OF SIDEWALK.
5. PUSH BUTTON DETECTOR FOR PEDESTRIAN CROSSING SHALL BE 6FT ABOVE GROUND.

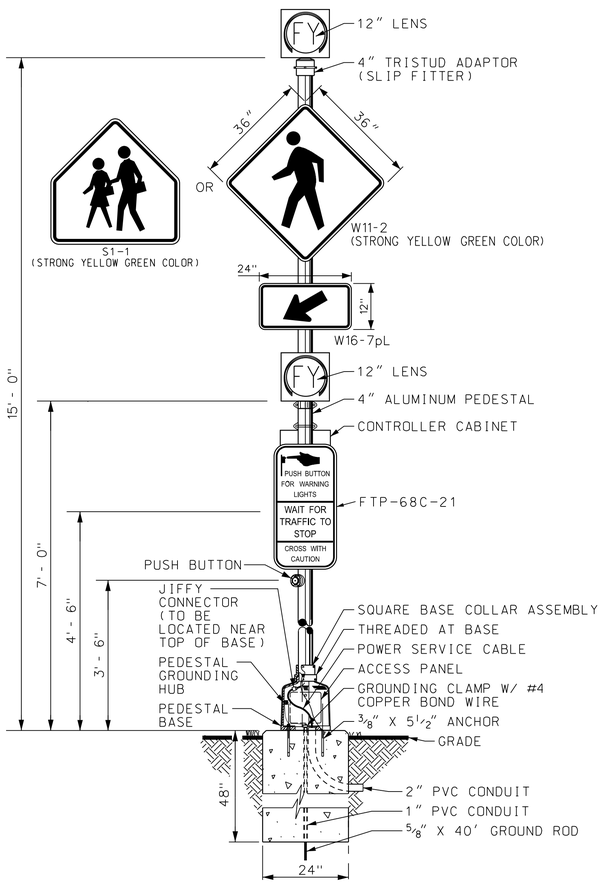

PED FLASHER DETAIL

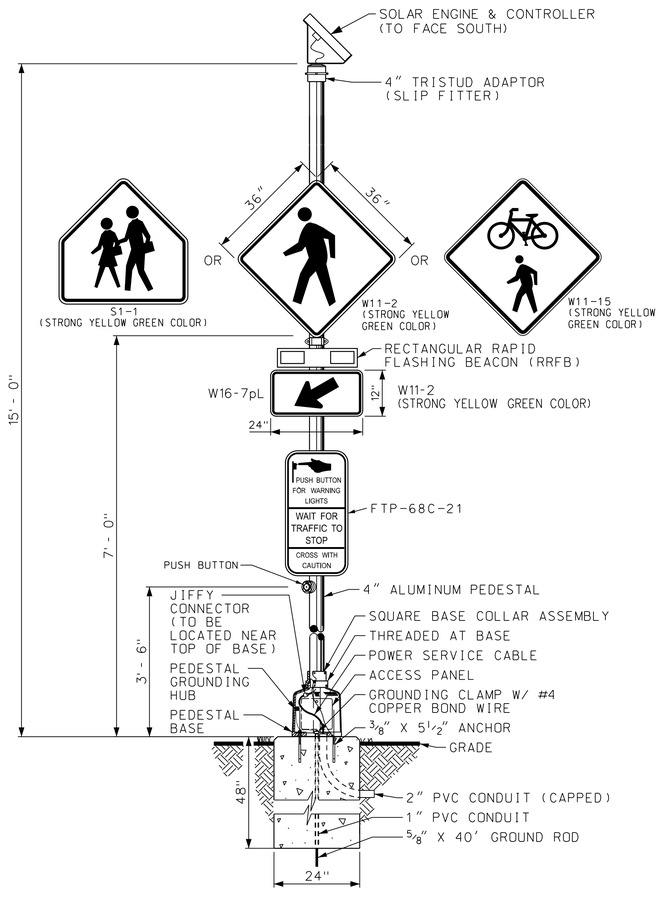

RECTANGULAR RAPID
FLASHING BEACON DETAIL (RRFB)

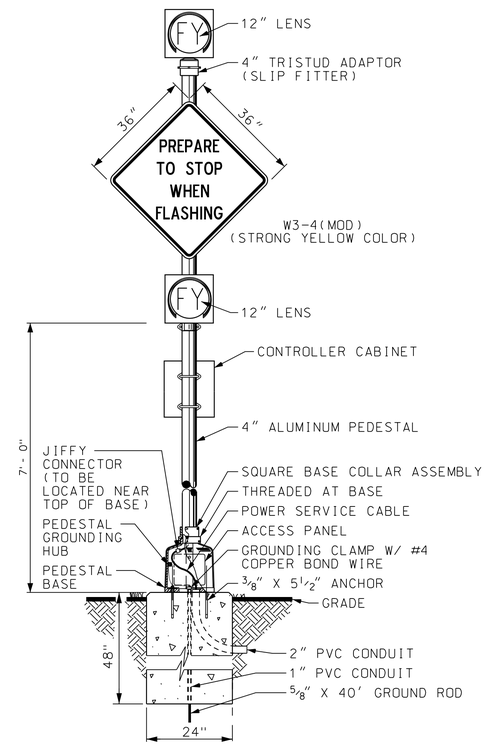

PREPARE TO STOP
WHEN FLASHING
FLASHING BEACON DETAIL

GENERAL NOTES:

1. THIS DRAWING IS NOT TO SCALE.
2. DESIGN, LAYOUT & DATA ON THIS SHEET ARE FOR ILLUSTRATION PURPOSE ONLY.

PALM BEACH COUNTY, FLORIDA
TRAFFIC DIVISION

SIGNAL TYPICAL

DETAIL - PED FLASHER, RRFB & PREPARE TO STOP FLASHER

SIGNATURE | DATE | FATMEH N. JAFAR, ENGINEER OF RECORD

	NAME	DATE	SCALE	CONTRACT NO.
DRAWN BY			N. T. S.	
CHECKED BY				

DRAWING T-8.1 | SHEET 19 OF 29

NOTES:

1. FOR GROUND ROD INFORMATION SEE NOTES ON T-6.3.
2. PEDESTAL BASE DOORS MUST BE INSTALLED FACING TRAFFIC.
3. PEDESTALS MUST BE SECURED TO BASE WITH SET SCREW TO PREVENT MOVEMENT.
4. ALL PUSH BUTTONS SHALL BE NO MORE THAN 10" FROM THE BACK OF SIDEWALK.
5. PUSH BUTTON DETECTOR FOR PEDESTRIAN CROSSING SHALL BE 6FT ABOVE GROUND.

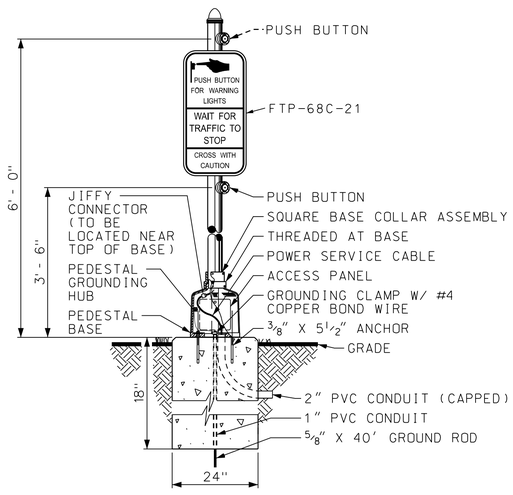

EQUESTRIAN CROSSING FLASHER DETAIL

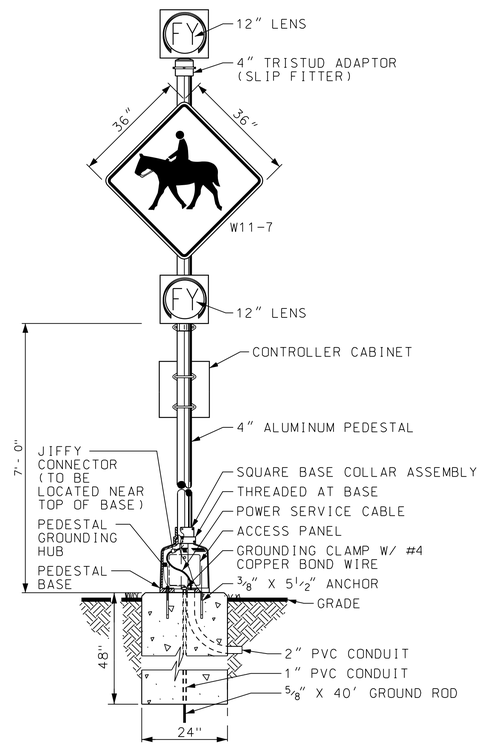

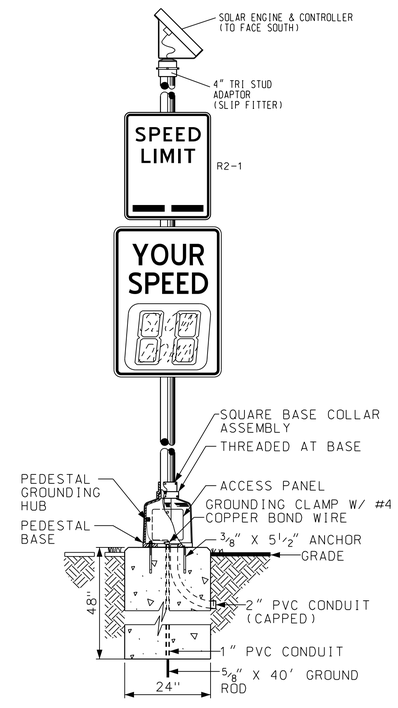

SPEED FEEDBACK SIGN DETAIL

GENERAL NOTES:

1. THIS DRAWING IS NOT TO SCALE.
2. DESIGN, LAYOUT & DATA ON THIS SHEET ARE FOR ILLUSTRATION PURPOSE ONLY.

PALM BEACH COUNTY, FLORIDA
TRAFFIC DIVISION

SIGNAL TYPICAL

DETAIL - EQUESTRIAN FLASHER & SPEED FEEDBACK SIGN

SIGNATURE	DATE	FATMEH N. JAFAR ENGINEER OF RECORD	
NAME	DATE	SCALE	CONTRACT NO.
DRAWN BY		N. T. S.	
CHECKED BY			
DRAWING T-8.2		SHEET 20 OF 29	

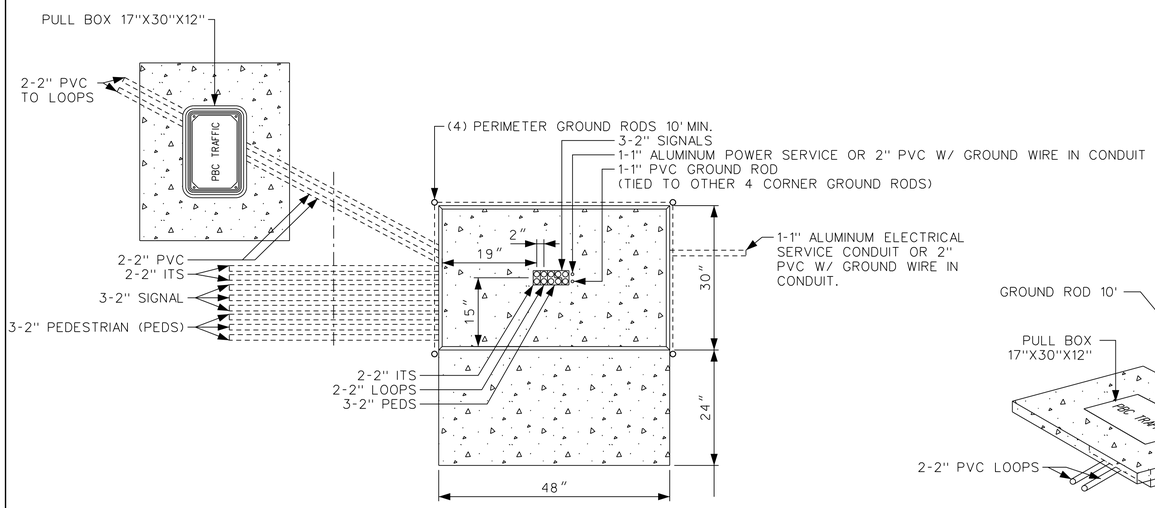

PLAN VIEW

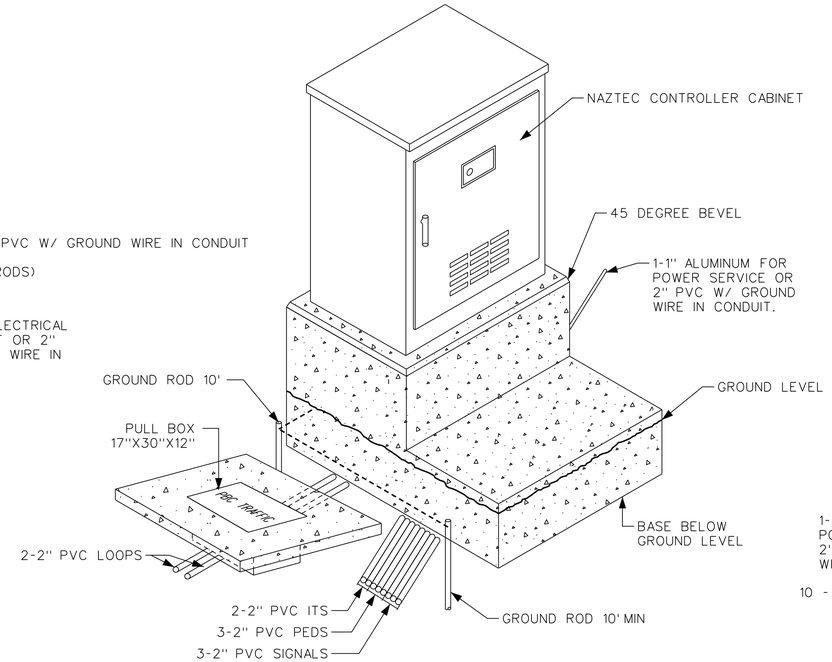

ISOMETRIC VIEW

NOTES:

1. 2" CONDUIT WILL EXTEND BEYOND THE CONTROLLER BASE IN THE PULL BOX (SIZE 17"X30"X12") OR AS APPROVED BY PBC ENGINEER.
2. ALL DUCTS SHALL BE SEALED WITH PERGUM OR EQUAL SUBSTANCE.
3. USE NAZTEC CONTROLLER ASSEMBLIES:
   A.) TYPE 4 CABINET FOR FIRE-STATION.
   B.) TYPE 6 CABINET FOR ALL INTERSECTIONS AND ALL NEW INSTALLATIONS.
   C.) TYPE 5 CABINET PER PBC ENGINEER APPROVAL.
4. BASE SIZES FOR ALL CABINETS AS SHOWN.

TYPICAL GROUND ROD ARRAY

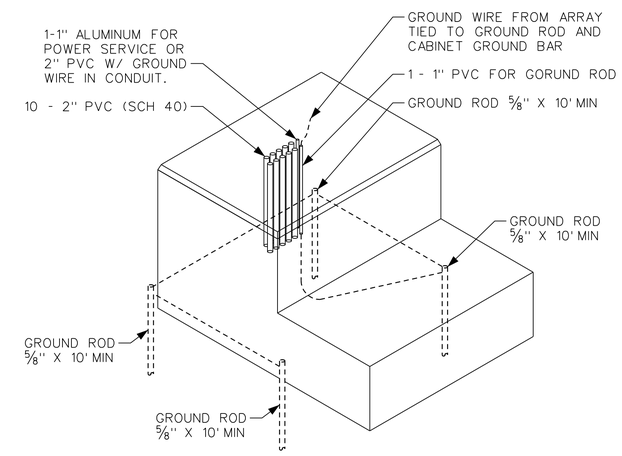

GROUND ROD NOTES:

1. FOUR (4) PERIMETER GROUND RODS SHALL BE BONDED AND BURIED WITH TOP OF ROD 6" BELOW GROUND LEVEL, 10 FT. LENGTH PER ROD MINIMUM.
2. FOR GROUND ROD INFORMATION SEE NOTES ON T-6.3.

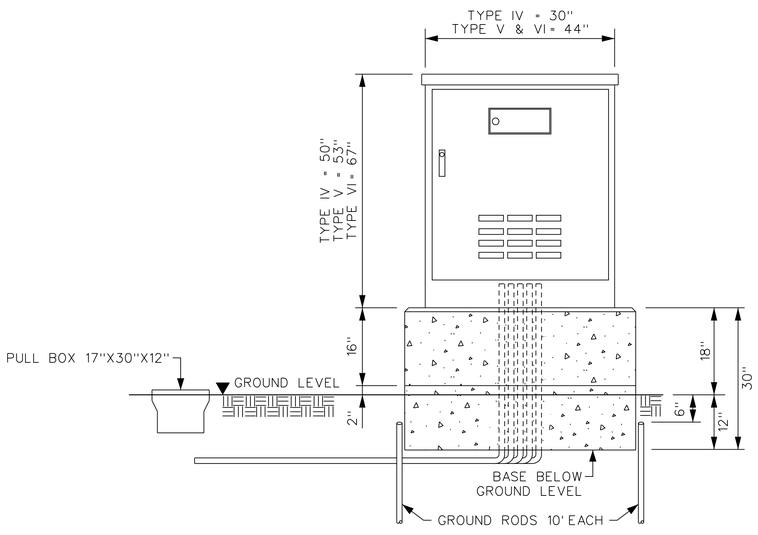

FRONT VIEW

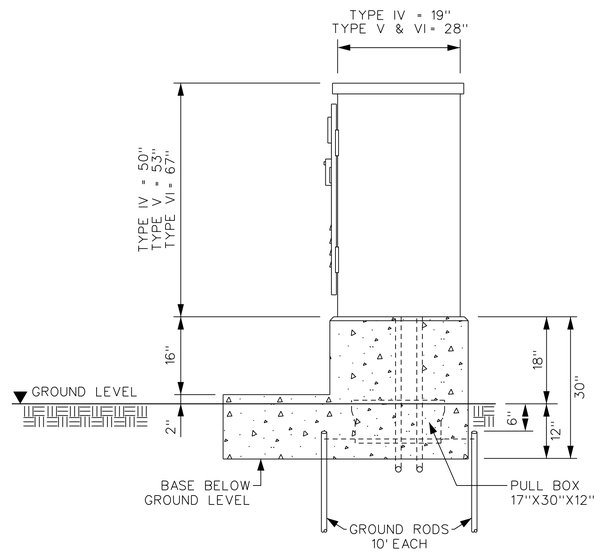

RIGHT-SIDE VIEW

CABINET & FOUNDATION DETAIL

GENERAL NOTES:

1. THIS DRAWING IS NOT TO SCALE.
2. DESIGN, LAYOUT & DATA ON THIS SHEET ARE FOR ILLUSTRATION PURPOSE ONLY.

PALM BEACH COUNTY, FLORIDA
TRAFFIC DIVISION

SIGNAL TYPICAL

DETAIL - CABINET INSTALLATION, FOUNDATION & TYPICAL GROUND ROD ARRAY

SIGNATURE		DATE	FATMEH N. JAFAR ENGINEER OF RECORD	
	NAME	DATE	SCALE	CONTRACT NO.
DRAWN BY			N. T. S.	
CHECKED BY				

DRAWING T-9 | SHEET 21 OF 29

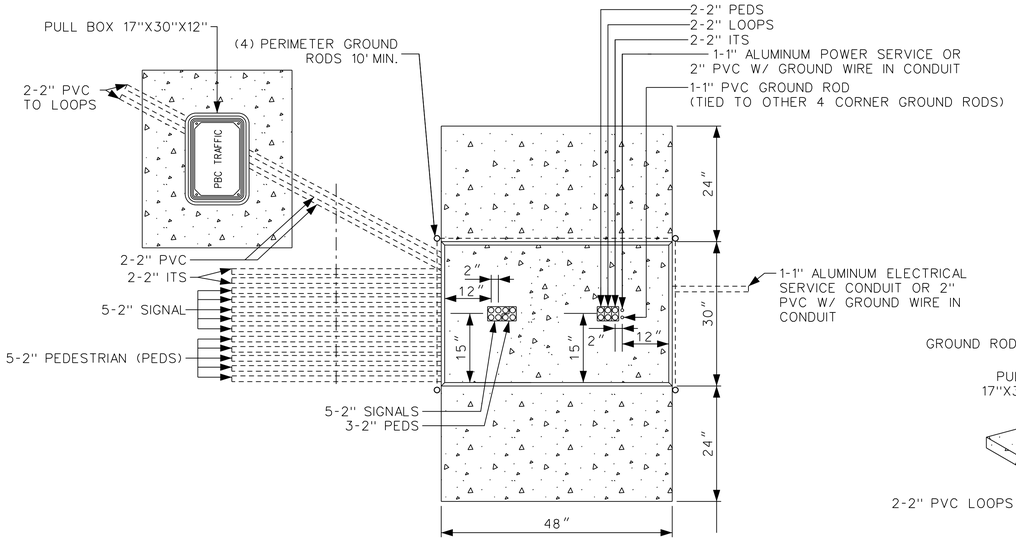

PLAN VIEW

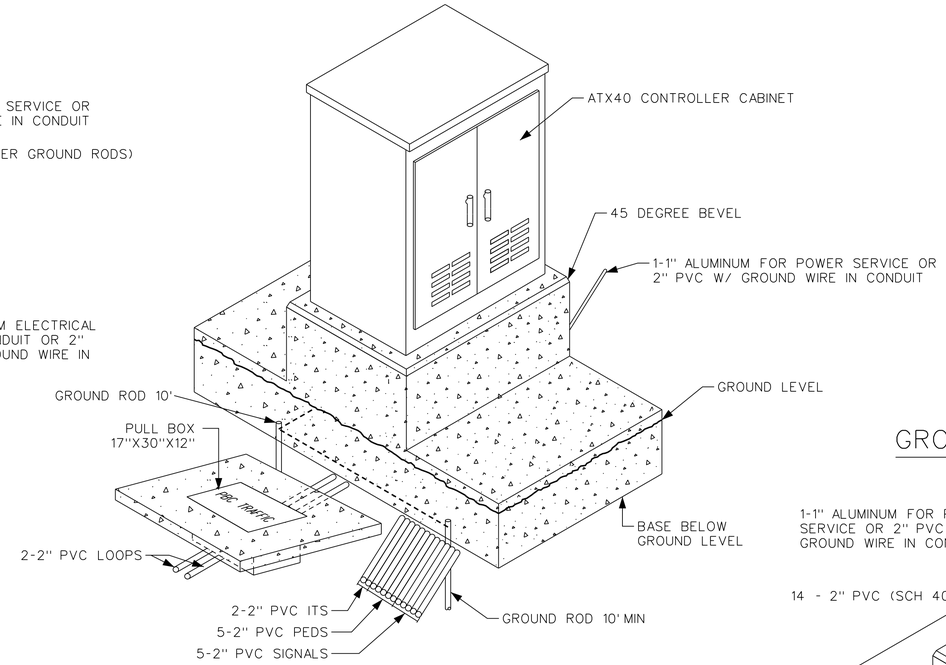

ISOMETRIC VIEW

GROUND ROD ARRAY

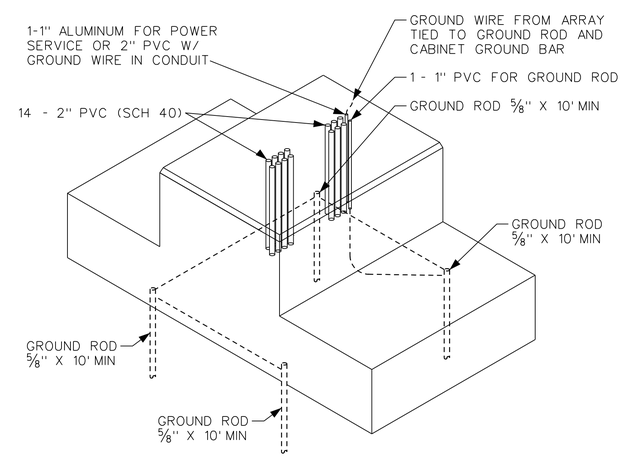

GROUND ROD NOTES:

1. FOUR (4) PERIMETER GROUND RODS SHALL BE BONDED AND BURIED WITH TOP OF ROD 6" BELOW GROUND LEVEL, 10 FT. LENGTH PER ROD MINIMUM.
2. FOR GROUND ROD INFORMATION SEE NOTES ON T-6.3.

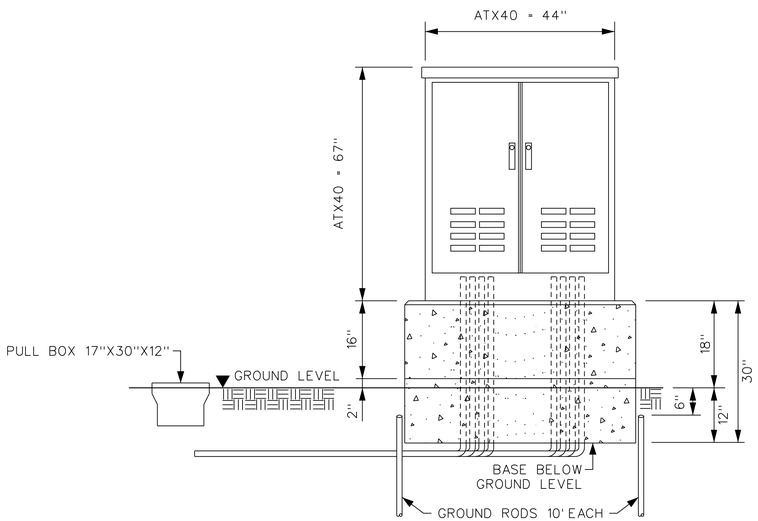

FRONT VIEW

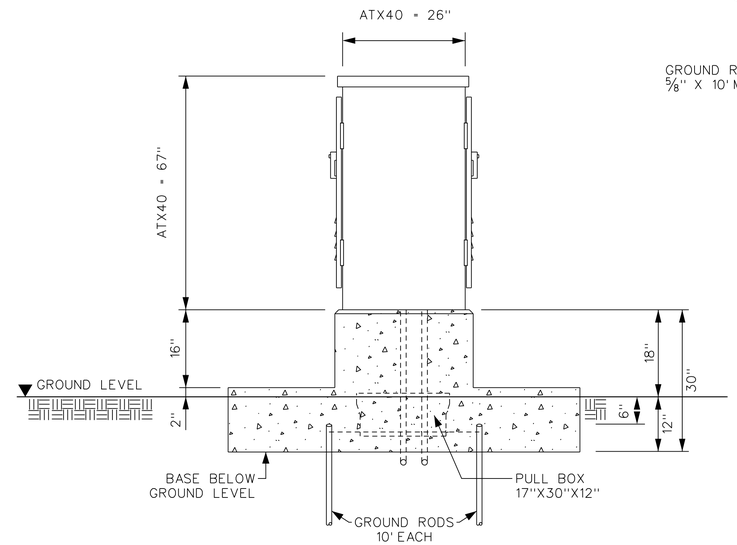

RIGHT-SIDE VIEW

ATX40 CABINET & FOUNDATION DETAIL

GENERAL NOTES:

1. THIS DRAWING IS NOT TO SCALE.
2. DESIGN, LAYOUT & DATA ON THIS SHEET ARE FOR ILLUSTRATION PURPOSE ONLY.

PALM BEACH COUNTY, FLORIDA
TRAFFIC DIVISION

SIGNAL TYPICAL

DETAIL - ATX40 CABINET, FOUNDATION & GROUND ROD ARRAY

SIGNATURE		DATE	FATMEH N. JAFAR ENGINEER OF RECORD	
	NAME	DATE	SCALE	CONTRACT NO.
DRAWN BY			N. T. S.	
CHECKED BY				

DRAWING T-9.1 | SHEET 22 OF 29

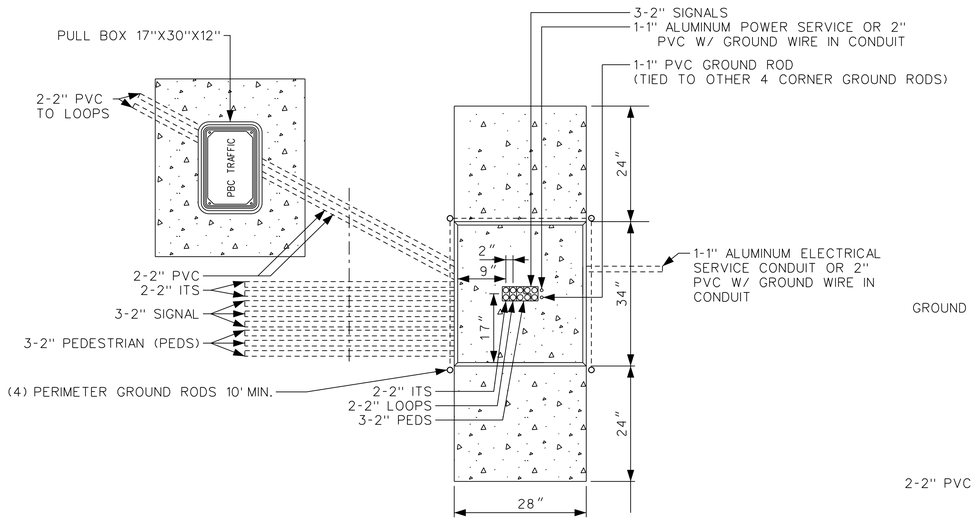

PLAN VIEW

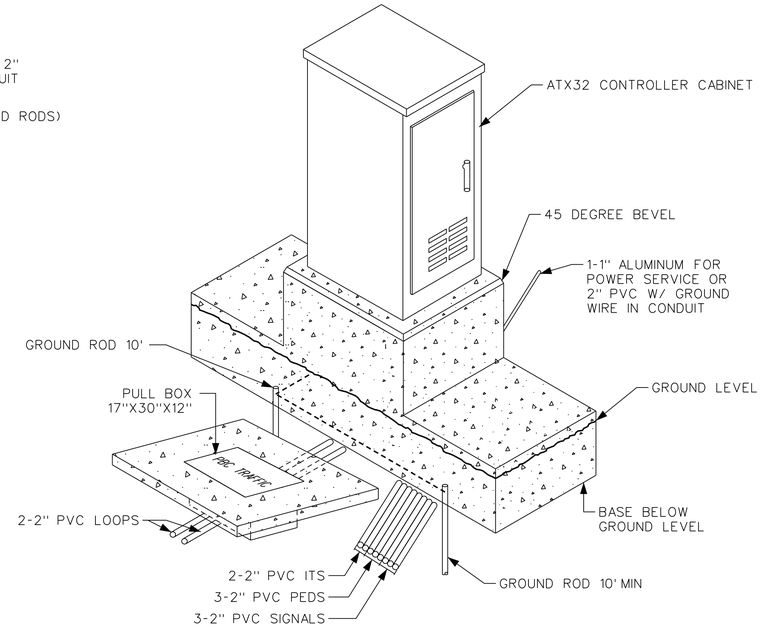

ISOMETRIC VIEW

GROUND ROD ARRAY

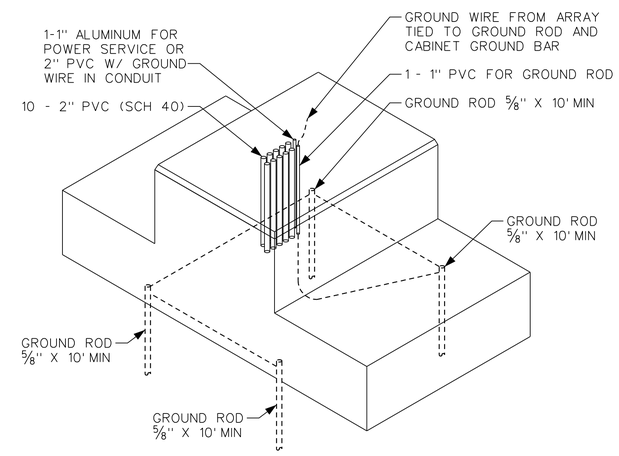

GROUND ROD NOTES:

1. FOUR (4) PERIMETER GROUND RODS SHALL BE BONDED AND BURIED WITH TOP OF ROD 6" BELOW GROUND LEVEL, 10 FT. LENGTH PER ROD MINIMUM.
2. FOR GROUND ROD INFORMATION SEE NOTES ON T-6.3.

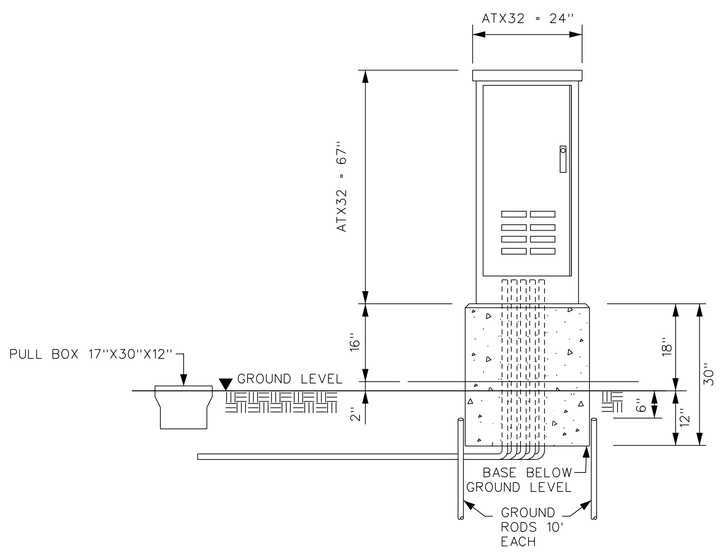

FRONT VIEW

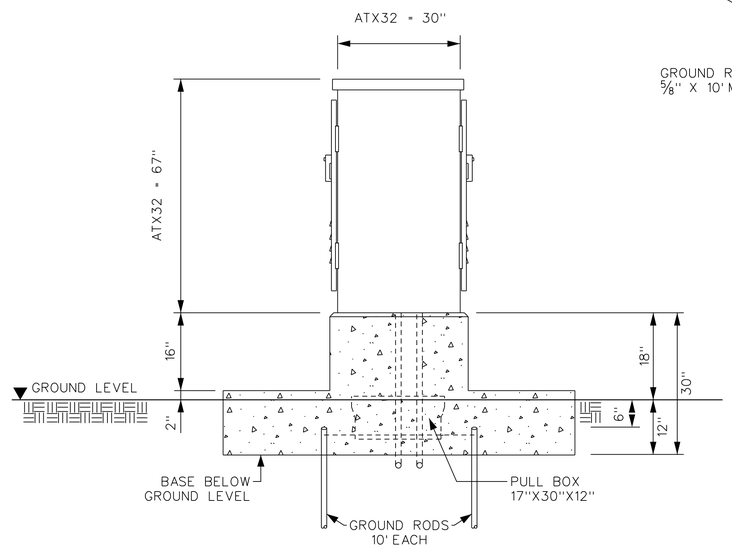

RIGHT-SIDE VIEW

ATX32 CABINET & FOUNDATION DETAIL

GENERAL NOTES:

1. THIS DRAWING IS NOT TO SCALE.
2. DESIGN, LAYOUT & DATA ON THIS SHEET ARE FOR ILLUSTRATION PURPOSE ONLY.

PALM BEACH COUNTY, FLORIDA
TRAFFIC DIVISION

SIGNAL TYPICAL

DETAIL - ATX32 CABINET, FOUNDATION & GROUND ROD ARRAY

SIGNATURE		DATE	FATMEH N. JAFAR ENGINEER OF RECORD	
	NAME	DATE	SCALE	CONTRACT NO.
DRAWN BY			N. T. S.	
CHECKED BY				
DRAWING T-9.2			SHEET 23 OF 29	

ILLUMINATED STREET NAME SIGN TYPICAL (LONG NAME)
ILLUMINATED STREET NAME SIGN TYPICAL (SHORT NAME)

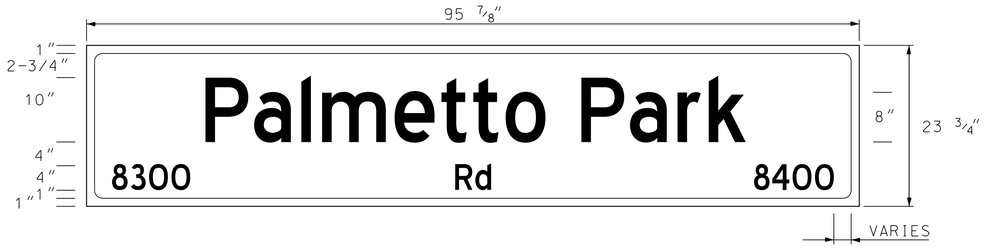

ILLUMINATED STREET NAME SIGN TYPICAL (LONG NAME)
DIVIDED STREET NAME OR T-INTERSECTION
ADD BLOCK NUMBER ON THE SAME SIDE AS INTERSECTING STREET

ILLUMINATED STREET NAME SIGN TYPICAL (SHORT NAME)

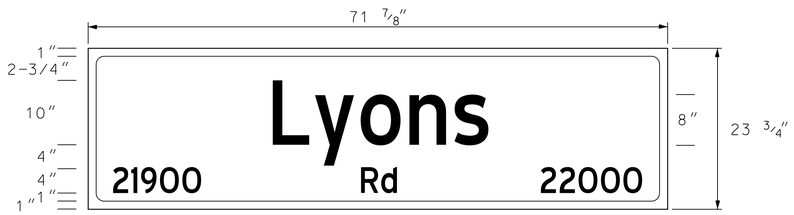

ILLUMINATED STREET NAME SIGN TYPICAL (SHORT NAME)
DIVIDED STREET NAME OR T-INTERSECTION
ADD BLOCK NUMBER ON THE SAME SIDE AS INTERSECTING STREET

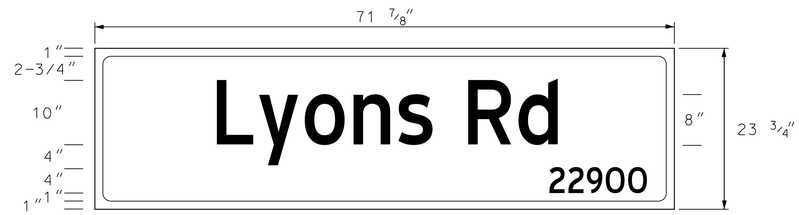

ILLUMINATED STREET NAME SIGN TYPICAL (LONG NAME)
AT EAST / WEST AND NORTH / SOUTH DIVIDING STREETS
ALT. DISPLAY: USE E, W, N OR S TO INDICATE DIRECTION WHEN BLOCK NUMBERS NOT APPLICABLE

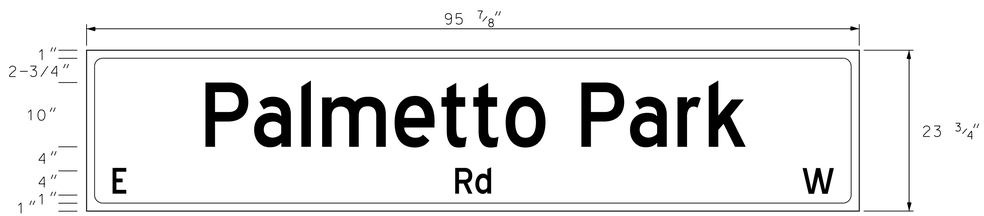

ILLUMINATED STREET NAME SIGN TYPICAL (SHORT NAME)
ALT. DISPLAY: DIRECTIONAL ARROW FOR DIVIDED STREET NAME OR T-INTERSECTION
WHEN BLOCK NUMBERS NOT APPLICABLE

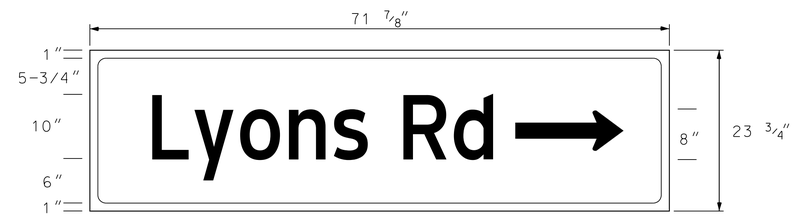

NOTES:

1.) USE UPPERCASE AND LOWERCASE STANDARD HIGHWAY ALPHABET SERIES FONT.
2.) 10" STANDARD FONT SIZE (ADJUST AS NEEDED).
3.) ILLUMINATED STREET NAME SIGNS TO BE INSTALLED WITH ALL MAST ARM INSTALLATIONS.
4.) ILLUMINATED STREET NAME SIGNS TO BE DOUBLE SIDED FREE SWINGING.
5.) ILLUMINATED STREET NAME SIGN FACES SHALL BE TRANSLUCENT LENSES AND THE BACKGROUND MUST HAVE TRANSLUCENT RETROREFLECTIVE SHEETING
6.) EACH SIGN SHALL HAVE A SEPARATE CABLE BACK TO BE TERMINATED ON THE ISNS PANEL OR BREAKER IN CABINET
7.) EACH SIGN SHALL HAVE A SEPARATE PHOTOCELL.
8.) SHOP DRAWINGS SHALL BE SUBMITTED TO PBC TRAFFIC ENGINEER FOR APPROVAL.

GENERAL NOTES:
1. THIS DRAWING IS NOT TO SCALE.
2. DESIGN, LAYOUT & DATA ON THIS SHEET ARE FOR ILLUSTRATION PURPOSE ONLY.

PALM BEACH COUNTY, FLORIDA
TRAFFIC DIVISION

SIGNAL TYPICAL

DETAIL - ILLUMINATED STREET NAME SIGN

SIGNATURE — DATE — FATMEH N. JAFAR, ENGINEER OF RECORD

	NAME	DATE	SCALE	CONTRACT NO.
DRAWN BY			N. T. S.	
CHECKED BY				

DRAWING T-10 | SHEET 24 OF 29

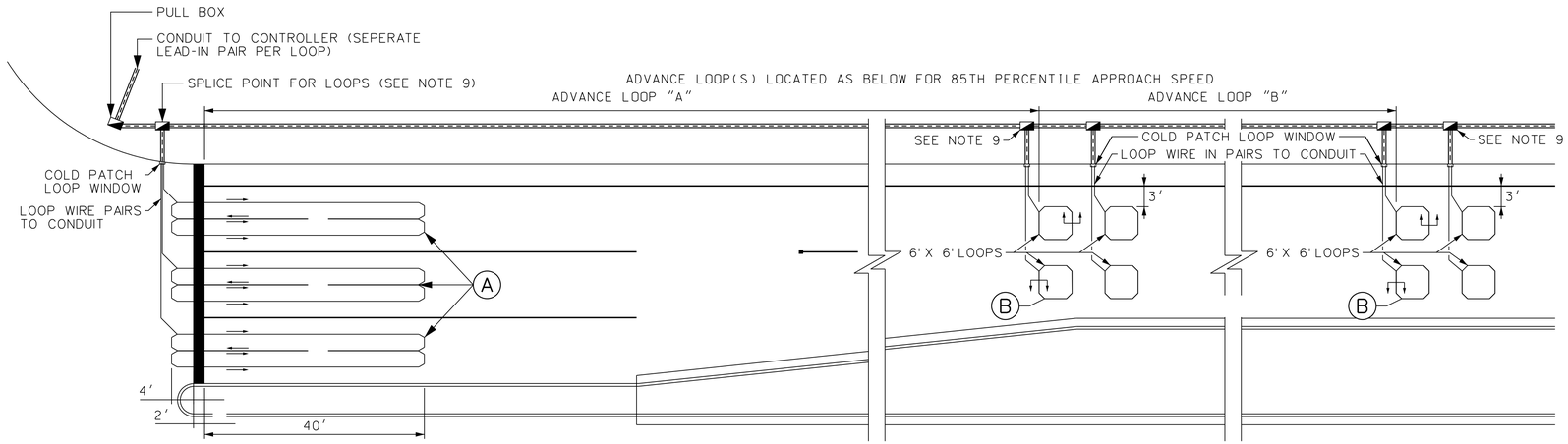

TYPICAL ADVANCE LOOP LOCATION - PER PLAN

TYPICAL 46' STOP BAR LOOP LOCATION

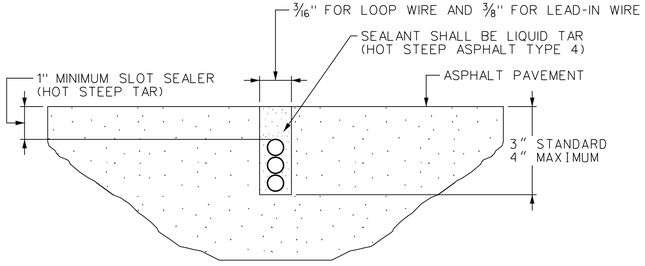

LOOPS AND LEAD-IN HOMERUN WIRES DETAIL

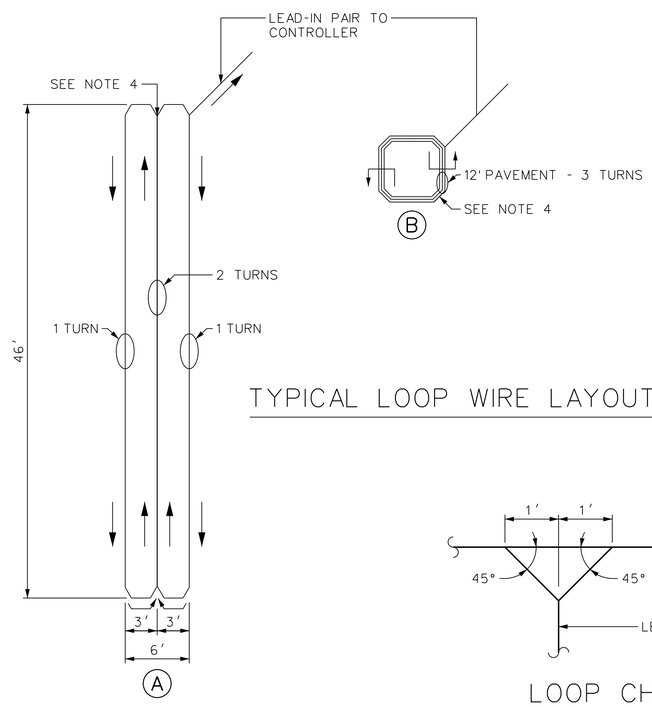

TYPICAL LOOP WIRE LAYOUT

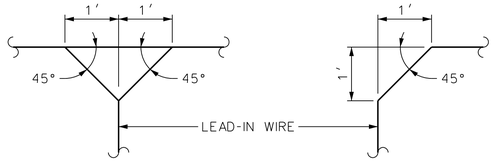

LOOP CHAMFER DETAIL

NOTES:

1. LOOP WIRE 14 AWG XHHW WITH STRANDED CROSS-LINKED POLYETHYLENE INSULATION 600 VOLTS N.E.C. STD. (WHITNEY BLAKE TYPE 632-0801).
2. LEAD-IN CABLE SHALL BE 18 AWG TINNED COPPER, TWO CONDUCTOR POLYETHYLENE INSULATED, TWISTED SHIELDED PAIR, STRANDED TINNED COPPER DRAIN WIRE, PVC CHROME VINYL POLYVINYL CHLORIDE JACKET, 300V.
3. LOOP "A" REPRESENTS TYPE F PER FDOT INDEX 17781.
4. SEE DETAIL T-11.1 FOR LOOP LEAD-IN SPLICE.
5. ALL LOOP CORNERS SHALL BE CHAMFERED BY 1 FOOT AT 45 DEGREES.
6. THE DEPTH OF ALL SAW CUTS, EXCEPT ACROSS EXPANSION JOINTS, SHALL BE 3" STANDARD WITH A MAXIMUM OF 4".
7. ALL LOOPS ARE CONNECTED TO CONTROLLER WITH CONDUITS CONNECTING PULL BOXES AT EACH CORNER.
8. LOOP SEALANT SHALL BE LIQUID TAR (HOT STEEP ASPHALT TYPE 4)
9. ALL SPLICES SHALL BE MADE IN PULL BOXES. (TWISTED LOOP WIRE MUST BE BROUGHT TO PULL BOX THEN SPLICED TO LOOP LEAD-IN WIRE).
10. AT INTERSERCTIONS WHERE PAVERS ARE BEING INSTALLED CONDUITS MUST BE INSTALLED UNDER THE PAVERS FOR THE LOOP LEAD-INS.

ADVANCE LOOP LOCATION

85TH PERCENTILE SPEED	ADVANCE LOOP "A" BACK EDGE (FROM STOP BAR)	ADVANCE LOOP "B" BACK EDGE (FROM STOP BAR)
50 MPH	225 FEET	385 FEET
55 MPH	225 FEET	435 FEET
	OR AS NOTED ON PLAN	OR AS NOTED ON PLAN

USE ADVANCE LOOPS FOR RURAL AREAS ON ROADS WITH SPEED LIMIT OF 50 MPH OR HIGHER, UNLESS OTHERWISE SPECIFIED BY COUNTY ENGINEER.

GENERAL NOTES:

1. THIS DRAWING IS NOT TO SCALE.
2. DESIGN, LAYOUT & DATA ON THIS SHEET ARE FOR ILLUSTRATION PURPOSE ONLY.

PALM BEACH COUNTY, FLORIDA
TRAFFIC DIVISION

SIGNAL TYPICAL

DETAIL - STOP BAR LOOPS & ADVANCE LOOPS

SIGNATURE | DATE | FATMEH N. JAFAR, ENGINEER OF RECORD

	NAME	DATE	SCALE	CONTRACT NO.
DRAWN BY			N. T. S.	
CHECKED BY				

DRAWING T-11 | SHEET 25 OF 29

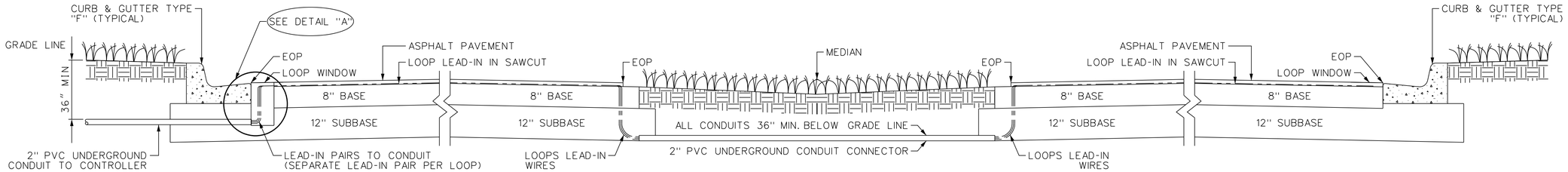

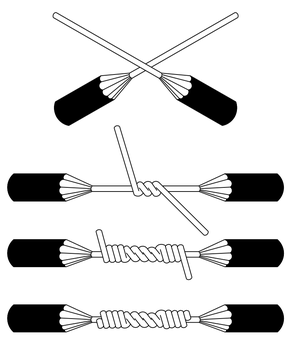

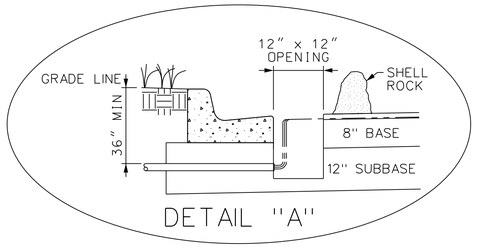

1. 12" X 12" OPENING FOR LOOP LEAD-INS.
2. USE REMOVED SHELL ROCK TO REFILL THE HOLE, COMPACT SHELL ROCK WITH HAND TAMPER.
3. SEAL HOLE WITH EQUAL AMOUNT OF ASPHALT AS REMOVED (4" MINIMUM), CROWN ASPHALT 2" HIGH ABOVE HOLE.

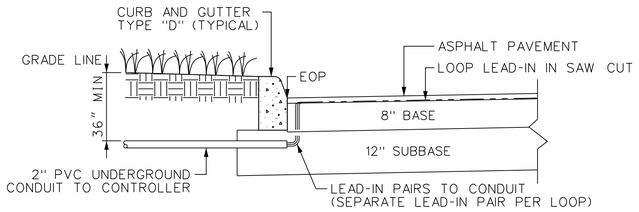

LOOP LEAD-IN INSTALLATION DETAIL

NOTES:

1. LEAD-IN CABLE SHALL BE 18 AWG TINNED COPPER, TWO CONDUCTOR POLYETHYLENE INSULATED, TWISTED SHIELDED PAIR, STRANDED TINNED COPPER DRAIN WIRE, PVC CHROME VINYL POLYVINYL CHLORIDE JACKET, 300V.
2. LOOP WIRE SHALL BE 14 AWG XHHW STRANDED COPPER.
3. LOOPS AND LEAD-INS SHALL ONLY BE SPLICED IN PULL BOXES. LOOP WIRES MUST BE TWISTED FROM HEAD OF LOOP AND RUN TO PULL BOX.

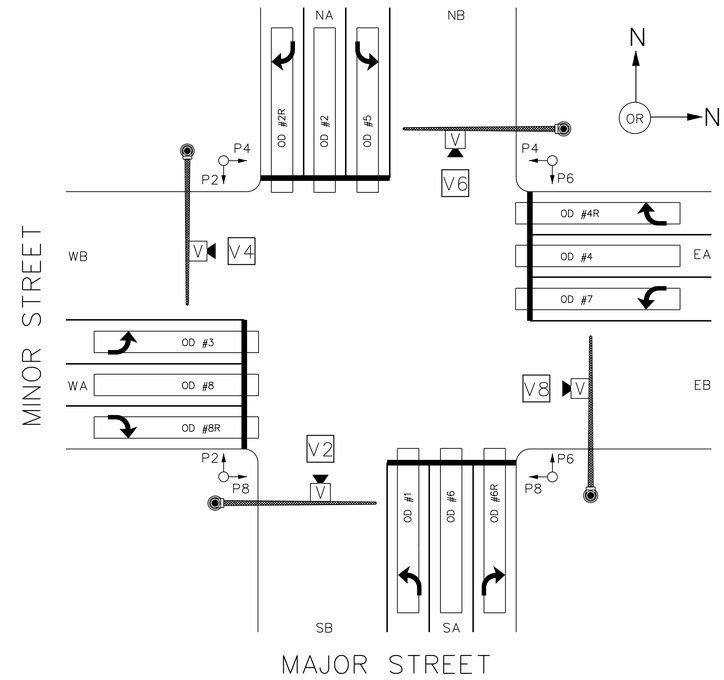

OD # = OPTICAL DETECTION ZONE

(SIZE EQUIVALENT TO SIZE OF LOOPS. SIZE MAY VARY AS PER PLAN.)

VIDEO DETECTION ZONE DETAIL

WESTERN UNION SPLICE * *

USE WESTERN UNION SPLICE METHOD FOR SPLICING AS DESCRIBED BELOW.

STEP 1:
PREPARE THE WIRES FOR SPLICING. ENOUGH INSULATION IS REMOVED TO MAKE THE SPLICE. THE CONDUCTOR IS CLEANED.

STEP 2:
BRING THE WIRES TO A CROSSED POSITION AND MAKE A LONG TWIST OR BEND IN EACH WIRE.

STEP 3:
WRAP ONE END OF THE WIRE AND THEN THE OTHER END FOUR OR FIVE TIMES AROUND THE STRAIGHT PORTION OF EACH WIRE.

STEP 4:
PRESS THE ENDS OF THE WIRES DOWN AS CLOSE AS POSSIBLE TO THE STRAIGHT PORTION OF THE WIRE. THIS PREVENTS THE SHARP ENDS FROM PUNCTURING THE TAPE COVERING THAT IS WRAPPED OVER THE SPLICE.

STEP 5:
SOLDER CONNECTION WITH NEW 60/40 ROSIN CORE SOLDER.

STEP 6:
AFTER SOLDER IS APPLIED, WRAP EACH SPLICE SEPARATELY WITH ELECTRICAL TAPE AND COVER WITH LIQUID ELECTRICAL COATING, 3M SCOTCHKOTE OR EQUIVALENT. THEN RE-TAPE AND RE-SEAL WITH ELECTRICAL COATING.

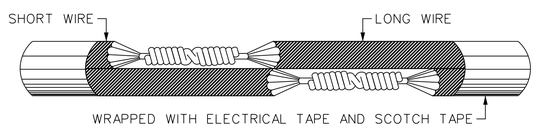

STAGGERING SPLICES * *

JOINING SMALL MULTICONDUCTOR CABLES OFTEN PRESENTS A PROBLEM. EACH CONDUCTOR MUST BE SPLICED AND TAPED. IF THE SPLICES ARE DIRECTLY OPPOSITE EACH OTHER, THE OVERALL SIZE OF THE JOINT BECOMES LARGE AND BULKY. A SMOOTHER AND LESS BULKY JOINT CAN BE MADE BY STAGGERING THE SPLICES.

FIGURE ABOVE SHOWS HOW A TWO-CONDUCTOR CABLE IS JOINED TO A SIMILAR SIZE CABLE BY USING A WESTERN UNION SPLICE AND BY STAGGERING THE SPLICES. CARE SHOULD BE TAKEN TO ENSURE THAT A SHORT WIRE FROM ONE SIDE OF THE CABLE IS SPLICED TO A LONG WIRE, FROM THE OTHER SIDE OF THE CABLE. THE SHARP ENDS ARE THEN CLAMPED FIRMLY DOWN ON THE CONDUCTOR. THE FIGURE SHOWS A WESTERN UNION SPLICE, BUT THE OTHER TYPES OF SPLICES WORK JUST AS WELL.

* * WESTERN UNION SPLICE AND STAGGERING SPLICE DETAILS ADAPTED FROM ELECTRICAL ENGINEERING TRAINING SERIES.WEB SITE: HTTP://TPUB.COM/NEETS/ (JAN. 2010)

TAPE EACH CONDUCTOR SPLICE INDIVIDUALLY, THEN TAPE PAIR TOGETHER. SCOTCHCOTE SPLICE, TAPE AND SCOTCHCOTE AGAIN.

GENERAL NOTES:
1. THIS DRAWING IS NOT TO SCALE.
2. DESIGN, LAYOUT & DATA ON THIS SHEET ARE FOR ILLUSTRATION PURPOSE ONLY.

PALM BEACH COUNTY, FLORIDA
TRAFFIC DIVISION

SIGNAL TYPICAL

DETAIL - INDUCTANCE LOOP DETECTOR SPLICING, LOOP LEAD-IN & VIDEO DETECTION ZONE

SIGNATURE | DATE | FATMEH N. JAFAR, ENGINEER OF RECORD

	NAME	DATE	SCALE	CONTRACT NO.
DRAWN BY			N. T. S.	
CHECKED BY				

DRAWING T-11.1 | SHEET 26 OF 29

5 - LANE ROADWAY SECTION

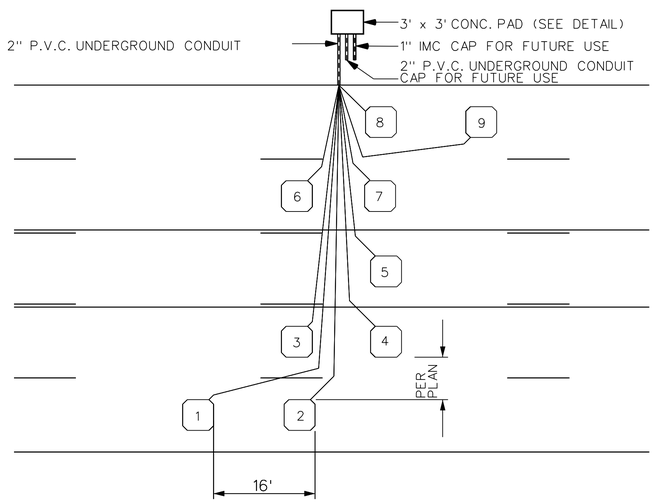

6'X6' LOOP DETAIL

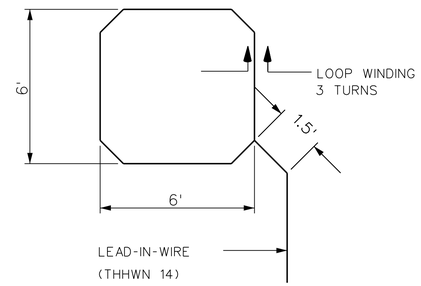

DESIGN NOTES:

1. ALL LOOPS ARE TO BE 6' X 6', WIRE = THHN 14, THREE TURNS. (LOOP SIZE MAY VARY AS PER PLAN.)
2. LEAD-IN SHALL EXTEND 18" AT A 45° ANGLE
3. SPACE LOOPS 16' (LEADING EDGE TO LEADING EDGE) APART.
4. POSITION LOOPS TO BE IN CENTER OF LANE.
5. LOOP LEAD-INS ARE TO BE LABELED AS TO LANE & DIRECTION.
6. EXACT LOCATION OF CONCRETE PAD & BOX TO BE DETERMINED BY THE TRAFFIC DIVISION OR AS PLAN.
7. CABINET TO BE PROVIDED BY THE TRAFFIC DIVISION UNLESS OTHERWISE INDICATED.
8. ONE 2" PVC SCH. 40 AND ONE 1" IMC CONDUIT STUBED-OUT AND CAPED ARE FOR FUTURE USE.
9. AS PER FLORIDA DEPARTMENT OF TRANSPORTATION STANDARD SPECIFICATION FOR ROAD AND BRIDGE CONSTRUCTION 2022 EDITION, SECTION 660, INDUCTIVE LOOPS AND DESIGN STANDARD PLANS 2022-2023 (OR LATER VERSION) INDEX 660-001.

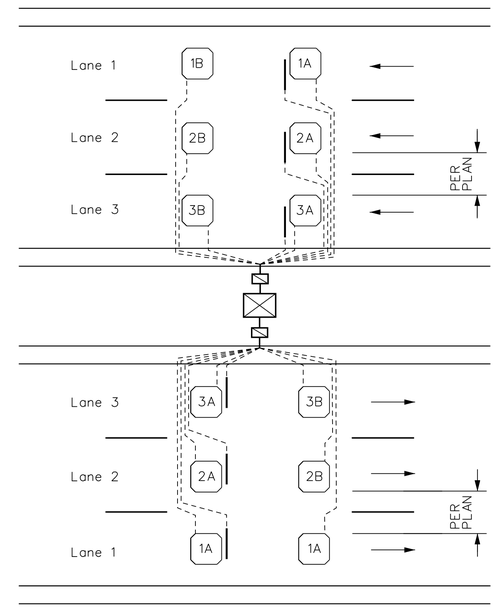

SIX LANE, DIVIDED - TWO WAY

DIVIDED ROADWAY SECTION

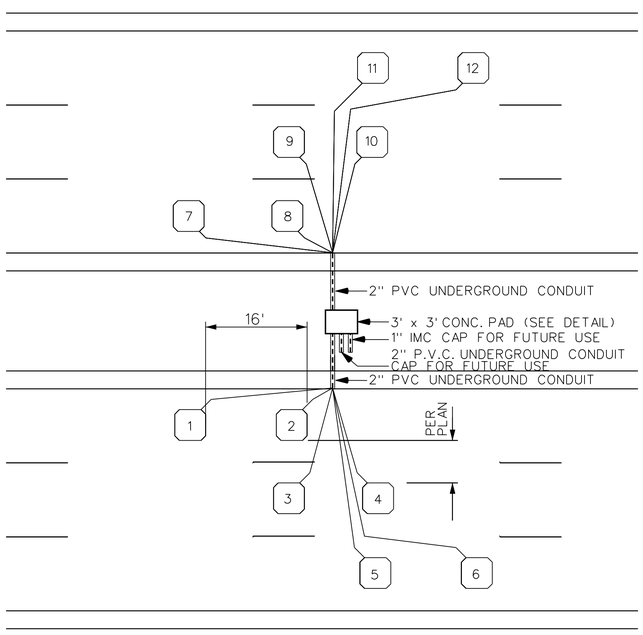

DIVIDED ROADWAY SECTION

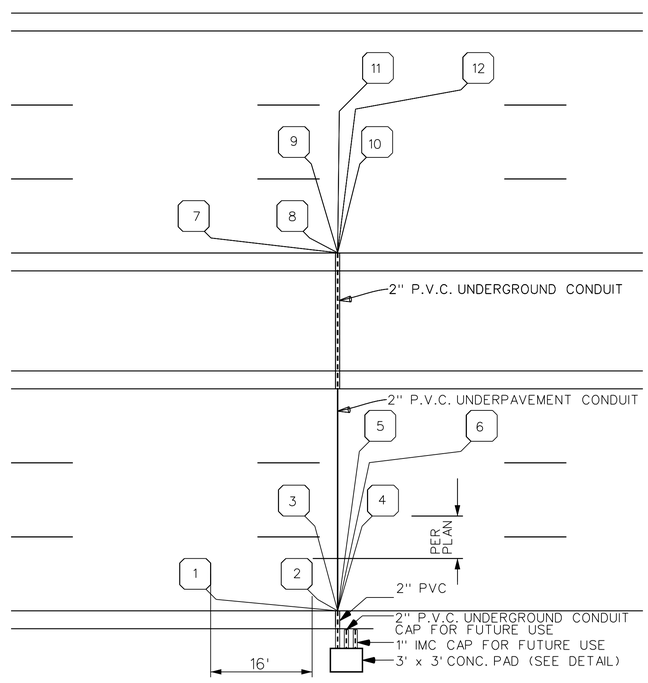

GENERAL NOTES:

1. THIS DRAWING IS NOT TO SCALE.
2. DESIGN, LAYOUT & DATA ON THIS SHEET ARE FOR ILLUSTRATION PURPOSE ONLY.

PALM BEACH COUNTY, FLORIDA
TRAFFIC DIVISION

SIGNAL TYPICAL

DETAIL - PERMANENT COUNT STATION LOOP

SIGNATURE		DATE	FATMEH N. JAFAR ENGINEER OF RECORD	
	NAME	DATE	SCALE	CONTRACT NO.
DRAWN BY			N. T. S.	
CHECKED BY				

DRAWING T-12 | SHEET 27 OF 29

THIS SHEET IS INTENTIONALLY LEFT BLANK

GENERAL NOTES:

1. THIS DRAWING IS NOT TO SCALE.
2. DESIGN, LAYOUT & DATA ON THIS SHEET ARE FOR ILLUSTRATION PURPOSE ONLY.

PALM BEACH COUNTY, FLORIDA
TRAFFIC DIVISION

SIGNAL TYPICAL

BLANK

SIGNATURE	DATE	FATMEH N. JAFAR ENGINEER OF RECORD	
	NAME / DATE	SCALE	CONTRACT NO.
DRAWN BY		N. T. S.	
CHECKED BY			
DRAWING T-13		SHEET 28 OF 29	

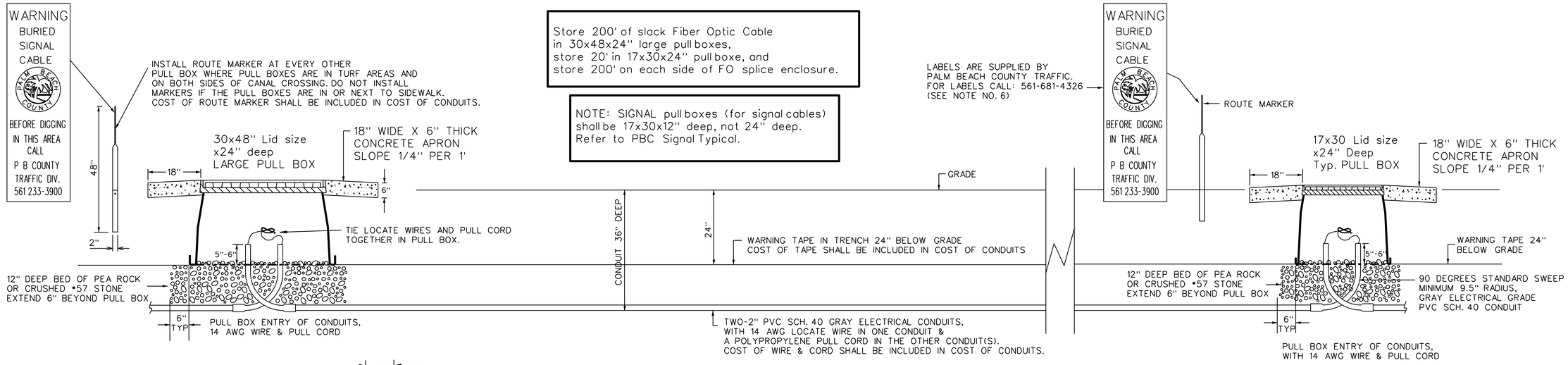

Store 200' of slack Fiber Optic Cable
in 30x48x24" large pull boxes,
store 20' in 17x30x24" pull boxe, and
store 200' on each side of FO splice enclosure.

NOTE: SIGNAL pull boxes (for signal cables)
shall be 17x30x12" deep, not 24" deep.
Refer to PBC Signal Typical.

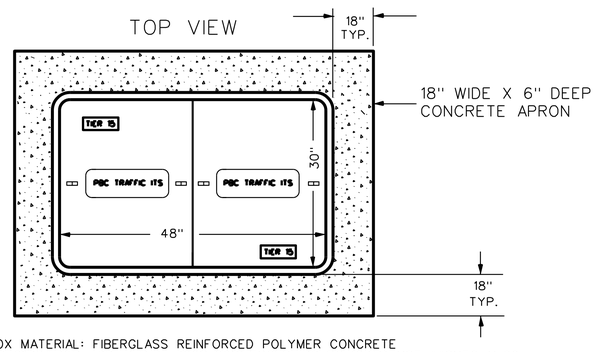

PULL BOX MATERIAL: FIBERGLASS REINFORCED POLYMER CONCRETE
LOAD SPECIFICATION: MIN. TIER 15 (20K-22K) EXCEPT IN ROADWAY USE AASHTO H-20.
LID STAMPED: "PBC TRAFFIC ITS". LID TYPE: TWO PANEL WITH TWO PULL SLOTS EACH

INSTALL A TYPICAL PULL BOXES (17X30X24" DEEP) EVERY 500' (+/-). INSTALL A LARGE PULL BOX (30X48X24" DEEP) EVERY 2000' (+/-)
AND AT EACH SIGNALIZED INTERSECTION, OR AS SHOWN ON THE PLANS.
WHERE A LARGE PULL BOX IS INSTALLED, IT TAKES THE PLACE OF THE TYPICAL PULL BOX.

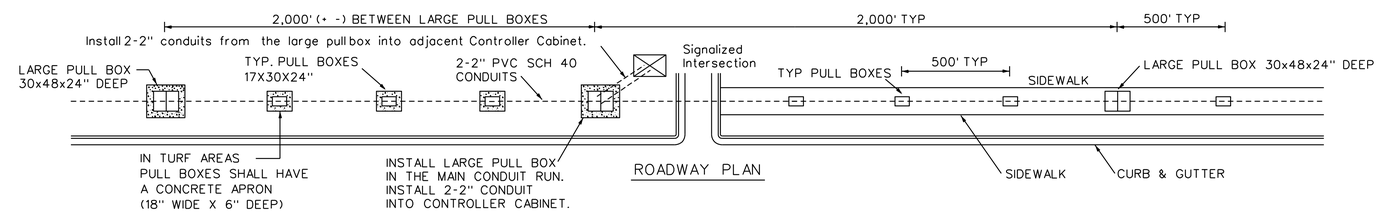

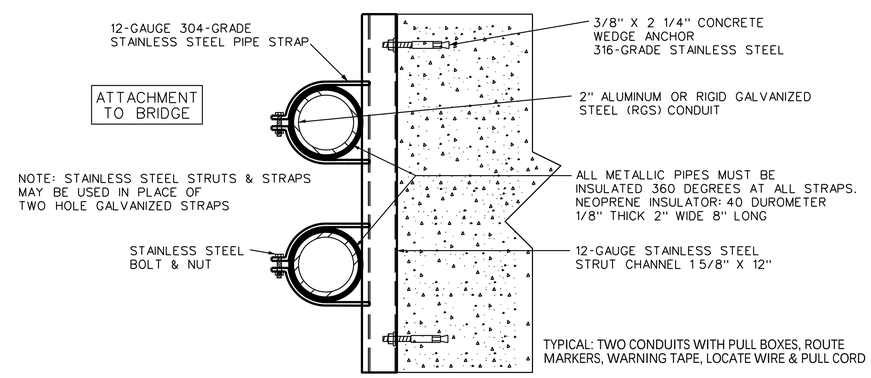

NOTES:

1. Typical (T-14) for applications not covered in this typical the contractor shal refer to the FDOT Standards Specifications 630 for Road and Bridge Construction.
2. Pull Boxes and Lids in sidewalks and turf areas shall be a minimum TIER 22 (20K-22K). In vehicular traffic areas (in the roadway) pull boxes shall be AASHTO H-20. Pull Box Lid shall be stamped "PBC TRAFFIC ITS". Large Pull Box Lids (30x48") shall have two panels with two pulling slots in each panel.
3. Underground Conduits and Sweeps shall be gray-electrical grade 2" PVC SCH 40 or HDPE SDR 11. Install conduits 36" below grade. Ends of conduit shall be sealed with water resistance duct seal.
4. One run of conduit between pull boxes shall not contain more than four (4) 90 degree bends (360 degrees) including pull box bends.
5. Signalized Intersections, install two-2" PVC SCh. 40 conduits from the large pull box into the traffic controller cabinet.
6. Locate Wire, install a 14 AWG insulated THWN strand copper wire (locate wire) in one conduit and a polypropylene pull cord in the other conduit(s). The locate wire, pull cord, warning tape, and guide post shall be included in the cost of the conduits.
7. Concrete Apron, all pull boxes shall be provided with concrete aprons when not located within sidewalk. Aprons shall be 18" wide x 6" thick sloped 1/4" per 1' away from pull box. Apron shall be Min. 2,500 PSI non structural Class I concrete. The cost of the apron is to be included in the cost to furnish and install pull box.
8. Pedestrian Ramp, pull box shall not be placed in a pedestrian ramp or slopped area of a pedestrian ramp.
9. Conduits in Pull Box shall be extended up 5" to 6" from the bottom of the pull box.
10. Bridge Attachment, when attaching conduits to bridge, wrap neoprene (rubber) gasket completely around galvanized or aluminum IMC conduit at each pipe strap to insulate conduit from pipe strap. Size of neoprene (rubber) insulator: 1/8" thick x 2" wide x 8" long.
11. Warning Tape: 3" wide, 6 mil thick, intended for burial and use as an underground utility warning notice, marked 'CAUTION BURIED FIBER OPTIC'. Tape shall be orange with black 2" high block letters on non color fading material. The marking tape shall be buried 24" below grade in the conduit trench from pull box to pull box. Cost included in cost of conduits.
12. Warning Labels, Palm Beach County Traffic Engineering, 2300 N Jog Rd, Tel.: 561-681-4326 will supply the Contractor with two warning label for each route marker.
13. PBC Engineer may request two or more 2" conduits as needed.

NO.	DATE	REVISIONS	BY	APP.
1	8-21-09	Changed pull box for fiber optic cable from 12" deep to 24" deep.	H.E.R.	
2	11-2-09	Changed Bridge Attachment from 1-Hole 'C' Strap to 2-Hole Strap.	H.E.R.	
3	11-27-12	Revised Bridge Attachment Per PBC ROAD & BRIDGE Min. Requirements.	H.E.R.	
4	10-25-13	Remove wire mesh for apron, Change PSI to 2500 non structural class I.	H.E.R.	
5	3-27-15	Locate wire, pull cord, warning tape, & guide post included in cost of cond.	H.E.R.	
6	12-15-15	All ITS Fiber Optic Pull Box Lids shall be stamped "PBC TRAFFIC ITS".	H.E.R.	
7	9-28-16	Pull Box in sidewalk or turf TIER 15 (20K-22K) in roadway-AASHTO H-20.	H.E.R.	
8	8-3-17	Changed Warning Tape from 12" to 24" below grade.	H.E.R.	
9	12-10-18	Store 200' Slack FO Cable on each side of a FO splice enclosure.	H.E.R.	
10	9-1-20	Conduit sweeps shall be 5" to 6" above bottom of pull box/pea rock.	H.E.R.	

PALM BEACH COUNTY, FLORIDA
TRAFFIC DIVISION

UNDERGROUND/UNDER PAVEMENT ITS TRAFFIC FACILITIES

DETAIL - COMMUNICATION CONDUITS, PULL BOXES & WIRING

SIGNATURE			DATE	REGISTERED ENGINEER
	NAME	DATE	SCALE	CONTRACT NO.
DRAWN BY	H. E. R.	4-23-97	N.T.S	
CHECKED BY	R.A.		T-14	

SHEET 14 OF 14 SHEETS