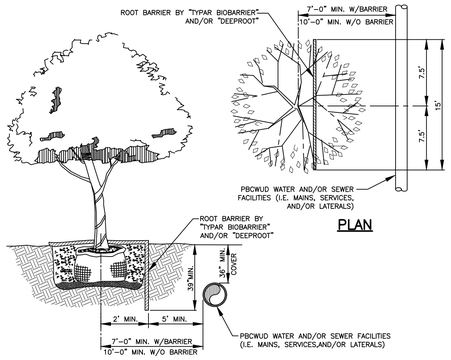

NOTES:

1. TREES SHOWN ON THIS PLAN ARE FOR GRAPHIC REPRESENTATION ONLY. TREE SPACING IS BASED ON DESIGN REQUIREMENTS AND THE TREES SHOWN ON THESE PLANS ATTEMPT TO ACCOMPLISH THAT SPACING WHILE MAINTAINING THE REQUIRED SETBACKS FROM UTILITIES. TREES MAY BE FIELD ADJUSTED TO AVOID CONFLICTS WITH DRIVEWAYS AND UNDERGROUND UTILITIES. IN ANY CASE THE TREES SHALL BE LOCATED IN THE FIELD IN ACCORDANCE WITH THE PLANTING DETAILS SHOWN HEREON.
2. TREES ARE TO BE INSTALLED WITH A TEN FOOT (10') SEPARATION FROM ANY WATER OR SEWER MAIN AND/OR SERVICE, HYDRANTS, AND LIFT STATIONS. IF A TEN FOOT (10') SEPARATION CANNOT BE ACHIEVED, THE TREE CAN BE INSTALLED WITH A ROOT BARRIER SYSTEM. HOWEVER, IN NO CASE SHALL A TREE ENCROACH INTO A PBCUE WITHOUT PRIOR DEPARTMENT APPROVAL.
3. ONLY SOD CAN BE INSTALLED WITHIN 7.5' MINIMUM OF A FLUSHING HYDRANT UNLESS OTHERWISE APPROVED BY THE FIRE MARSHAL AND THE DEPARTMENT.
4. SOD ONLY SHALL BE INSTALLED WITHIN 5.0' MINIMUM OF ANY DEPARTMENT RECLAIMED WATER METER.

LANDSCAPE AND ROOT BARRIER DETAIL ✳ 46R

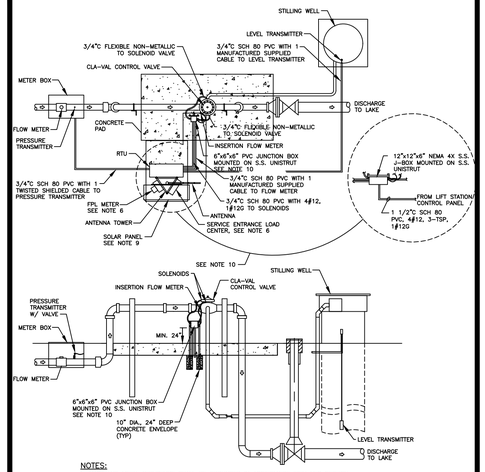

NOTES:

1. MAST AND METAL STRUCTURE SHALL BE GROUNDED IN ACCORDANCE WITH NEC SECTION 810-21.
2. ANTENNA INSTALLATION SHALL MEET THE WIND LOADING REQUIREMENT PER FLORIDA BUILDING CODE.
3. MINIMUM ANTENNA HEIGHT SHALL BE 12 FEET. IF ANY OBSTRUCTION IS LOCATED BETWEEN THE RADIO COMMUNICATION PATH, ANTENNA HEIGHT SHALL BE HIGHER THAN THOSE OBSTRUCTIONS.
4. CONDUITS SHALL NOT ENTER THE TOP OF CONTROL PANEL.
5. ALL ELECTRICAL PANELS SHALL BE GROUNDED.
6. METER AND SERVICE ENTRANCE RATED LOAD CENTER ARE NOT REQUIRED IF THE RTU IS SUPPLIED BY SOLAR POWER OR NEARBY LIFT STATION POWER.
7. ALL MOUNTING HARDWARE SHALL BE 316 STAINLESS STEEL.
8. MAINTAIN 36" CLEARANCE IN FRONT OF ALL ELECTRICAL PANELS.
9. SOLAR PANEL IS NOT REQUIRED IF 120 VAC POWER IS AVAILABLE.
10. FOR SHARE RTU/POWER CONFIGURATION, TOWER, METER AND LOAD CENTER ARE NOT REQUIRED. A LARGER 12"x12"x6" NEMA 4X S.S. J-BOX IS REQUIRED IN LIEU OF 6"x6"x6" J-BOX. SEE PAGE 44R FOR RTU SHARING BETWEEN LIFT STATION AND RECLAIMED WATER.

RECLAIMED WATER SYSTEM ELECTRICAL LAYOUT 42R

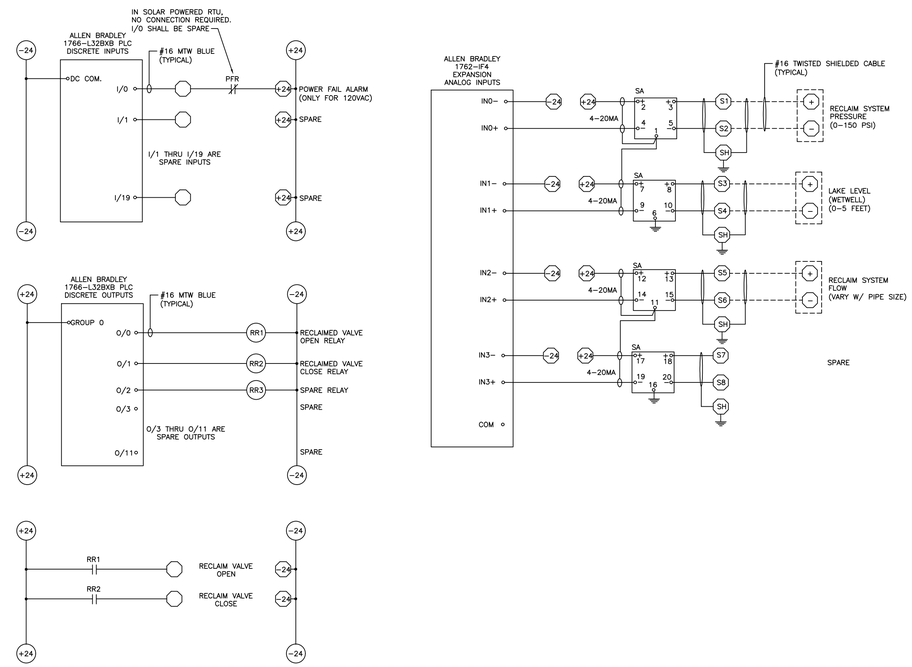

RECLAIMED WATER SYSTEM PLC INPUT/OUTPUT WIRING 43-44R

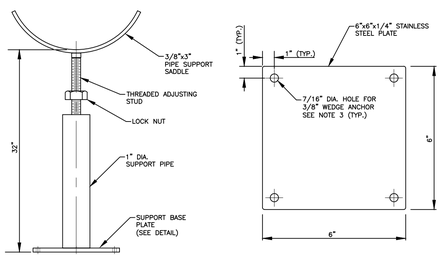

NOTES:

1. SHOP DRAWING FOR THE METER ASSEMBLY PIPE SUPPORT IS REQUIRED TO BE SUBMITTED FOR APPROVAL BY THE DEPARTMENT PRIOR TO THE PIPE SUPPORT BEING CONSTRUCTED AND/OR INSTALLED. ALL PIPE SUPPORTS FOR EACH METER ASSEMBLY INSTALLATION SHALL BE THE SAME.
2. ALL PIPE SUPPORT MATERIALS AND MOUNTING HARDWARE ARE REQUIRED TO BE 304 STAINLESS STEEL.
3. THE REQUIRED WEDGE ANCHORS FOR EACH SUPPORT SHALL BE 3/8" DIAMETER WITH NOMINAL EMBEDMENT OF 2-3/8". EACH ANCHOR SHALL HAVE A WASHER, LOCK WASHER, AND NUT.

ABOVE GROUND WATER METER INSTALATION PIPE SUPPORT ✳ 47R

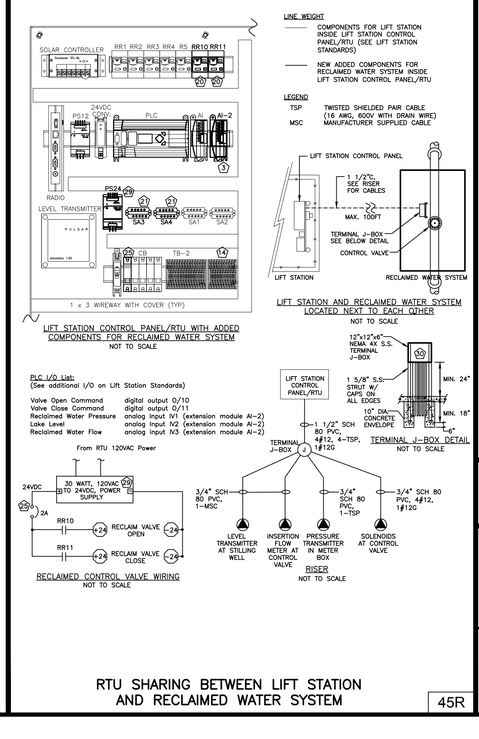

RTU SHARING BETWEEN LIFT STATION AND RECLAIMED WATER SYSTEM 45R

RECLAIMED WATER #5
STANDARD DETAILS

CONSULTANT:

IT'S THE LAW !
CALL 48 HOURS BEFORE YOU DIG
1-800-432-4770
SUNSHINE STATE ONE CALL OF FLORIDA, INC.
UTILITIES NOTIFICATION CENTER

DESIGNED BY: WUD
DRAWN BY: M. BUCKNER
CHECKED BY: J. LAMMERT
APPROVED BY: WUD

Palm Beach County
Water Utilities Department
P.O.Box 16097
West Palm Beach, FL 33416-6097

PROJECT NO. 00-000

PROJECT NAME

PALM BEACH COUNTY
WATER UTILITIES DEPARTMENT
P.O. BOX 16097
WEST PALM BEACH, FL 33416
(561)493-6000

NO.	DATE	REVISION / REMARKS	BY
	JUN 2019	✳ GENERAL REVISION	J.L.

STD DETAILS

SHEET NUMBER 0 OF 0

SEAL

Jul 30, 2019